VKP 4D 600x350 (3~ 400 Y)



Centrifugal inline fans with backward curved blades

- Sound pressure level LpA at 3 m: 50
- Impeller type: Centrifugal impeller with backward curved blades
- Casing material: Galvanized steel
- Installation in any position

	Unit of measurement	VKP 4D 600x350 (3~ 400 Y)
Connected air duct size	mm	600x350
Phases	-	3
Connection type	-	Y
Minimum supply voltage	V	400
Maximum supply voltage	V	400
Power supply frequency	Hz	50/60
Rated power	W	380
Unit current	A	0.7
Maximum airflow	m³/h	2660
Rotation speed at 50hz	-	1235
Sound pressure level LpA at 3 m	dB(A)	50
Weight	kg	36.38
Transported air temperature (max)	°C	80
Transported air temperature (min)	°C	-30
Ingress protection rating	-	IPX4
Ingress protection rating of the drive	-	IP44
Impeller material	-	Aluminium

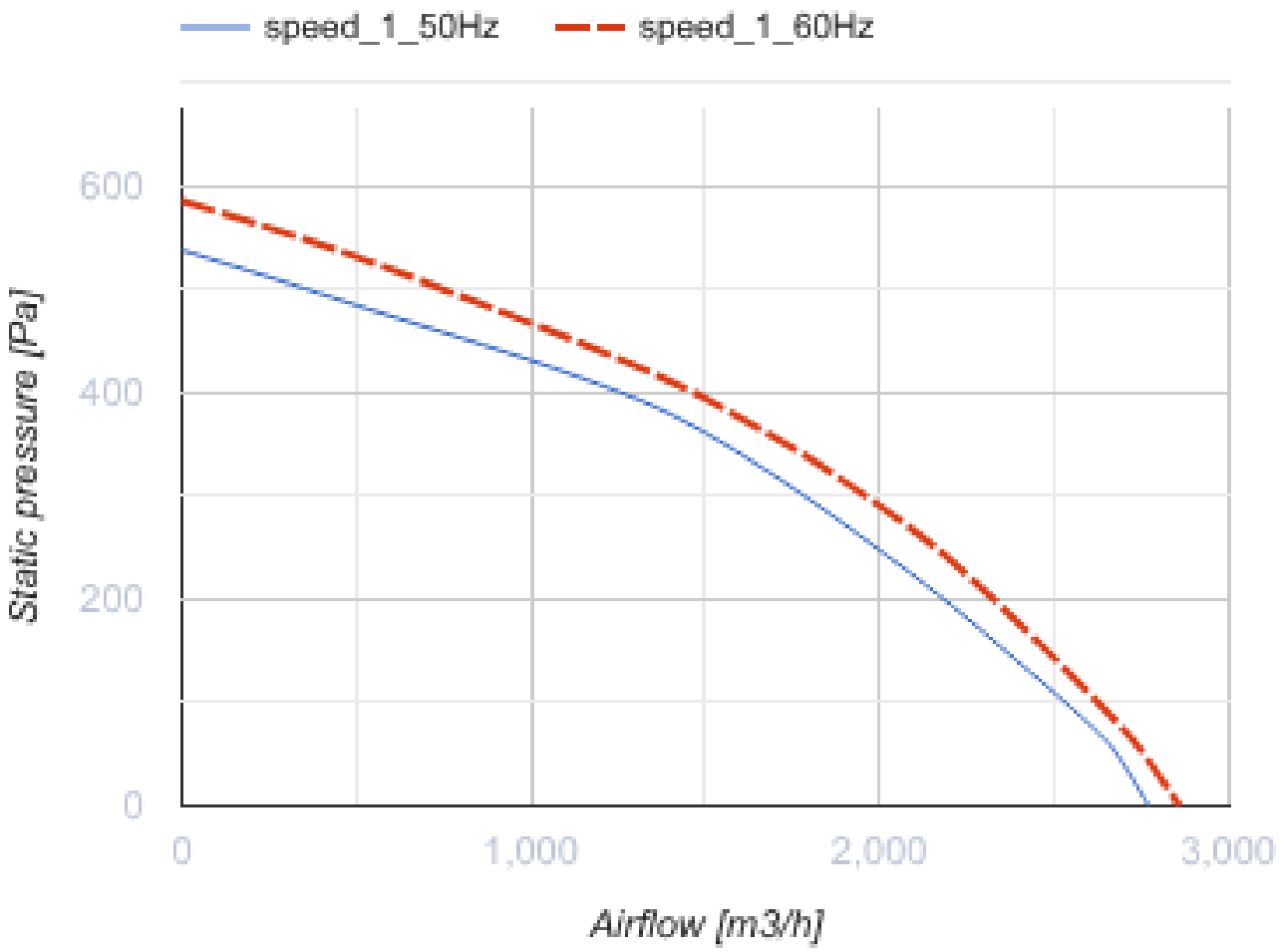

Dimensions

B	B1	B2	H	H1	H2	H3	L
600	620	640	350	370	390	390	735

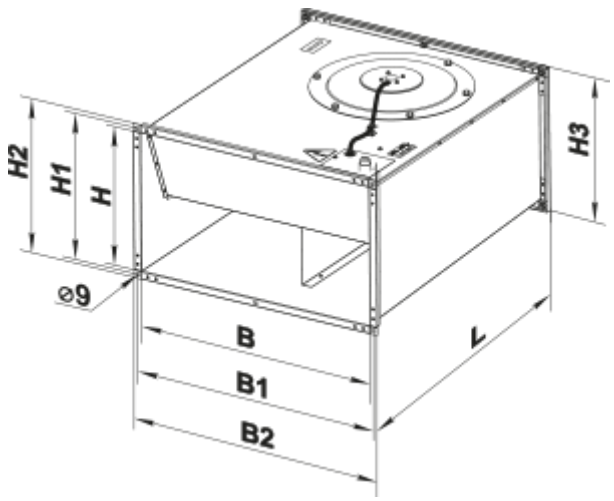

Accessories

For rectangular ducts

Name	Photo	Description
SR 600x350	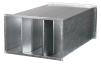	Plate silencer for installation in rectangular ducts

For rectangular ducts

Name	Photo	Description
FB 600x350		Rectangular panel air filters
FBK 600x350-4		Rectangular bag air filters
FBK 600x350-5		Rectangular bag air filters
FBK 600x350-7		Rectangular bag air filters

For rectangular ducts

Name	Photo	Description
KOM1 600x350		Backdraught gravity dampe for shutting off air flow in rectangular air ducts
KR 600x350		Air dampers for controlling air flow in rectangular air ducts

For rectangular ducts

Name	Photo	Description
VVG 600x350		Flexible anti-vibration inserts for round air ducts

Water heaters

Name	Photo	Description

NKV 600x350-2		Inline water supply air heaters or heater for air handling units with a rectangular cross-section

Electrical heaters

Name	Photo	Description
NK 600x350-9,0-3		Rectangular electric inline heaters

Airflow regulators

Name	Photo	Description
RRV 600x350		Air flow controllers

Water coolers

Name	Photo	Description
OKW 600x350-3		Rectangular inline water coolers

Freon coolers

Name	Photo	Description
OKF 600x350-3		Rectangular inline direct evaporative coolers