VKPF 4D 400x200



Centrifugal inline fans with forward curved blades

• Sound pressure level LpA at 3 m: 52
• Impeller type: Centrifugal impeller with forward curved blades
• Casing material: Galvanized steel
• Installation in any position

	Unit of measurement	VKPF 4D 400x200
Connected air duct size	mm	400x200
Phases	-	3
Maximum supply voltage	V	400
Minimum supply voltage	V	400
Power supply frequency	Hz	50
Rated power	W	282
Unit current	A	0.6
Maximum airflow	m³/h	1470
Rotation speed at 50hz	-	1300
Sound pressure level LpA at 3 m	dB(A)	52
Weight	kg	17.5
Transported air temperature (max)	°C	45
Transported air temperature (min)	°C	-25
Ingress protection rating	-	IPX4
Ingress protection rating of the drive	-	IP44
Impeller material	-	Galvanized steel

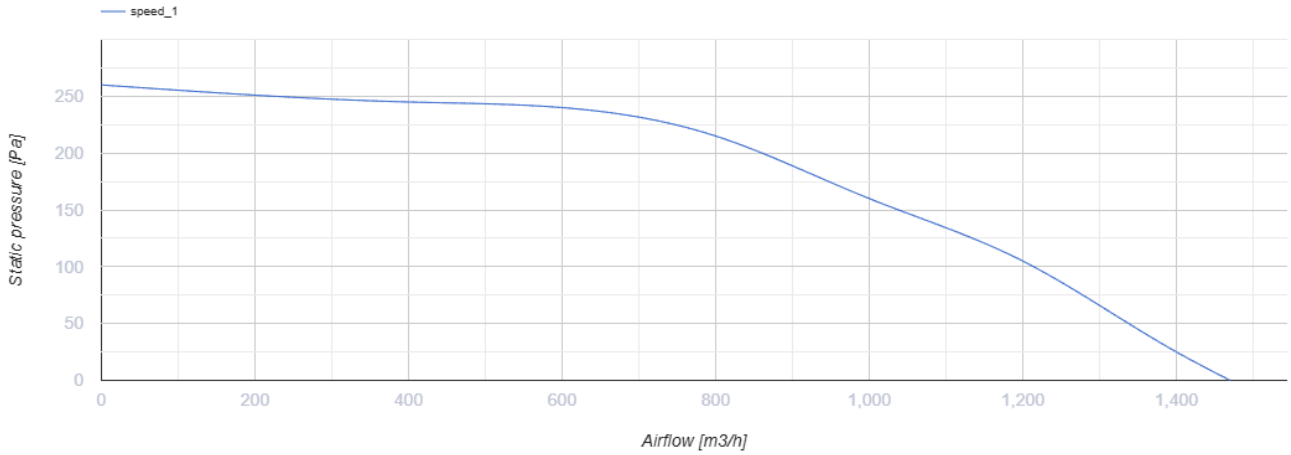

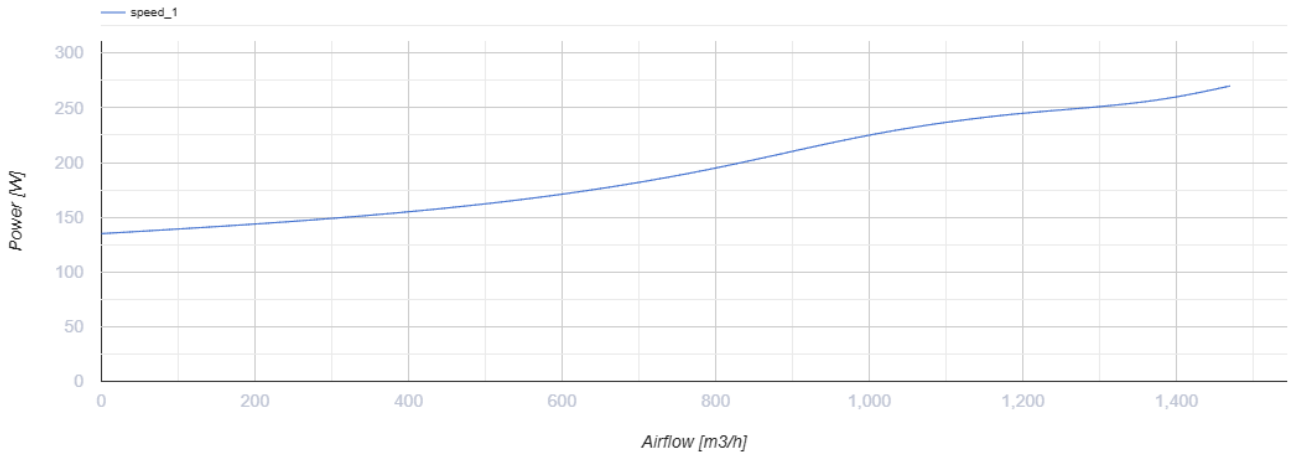

Dimensions

B	B1	B2	H	H1	H2	H3	L
400	420	440	200	220	240	255	500

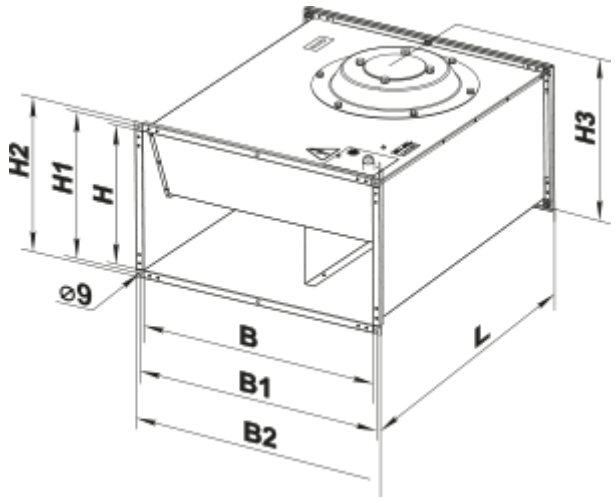

Accessories

For rectangular ducts

Name	Photo	Description
SR 400x200	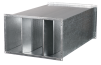	Plate silencer for installation in rectangular ducts

For rectangular ducts

Name	Photo	Description
FB 400x200		Rectangular panel air filters
FBK 400x200-4		Rectangular bag air filters
FBK 400x200-5		Rectangular bag air filters
FBK 400x200-7		Rectangular bag air filters

For rectangular ducts

Name	Photo	Description
KOM1 400x200		Backdraught gravity dampe for shutting off air flow in rectangular air ducts
KR 400x200		Air dampers for controlling air flow in rectangular air ducts
KG 400x200		Gravity valve for automatic airflow shut-off in round air ducts

For rectangular ducts

Name	Photo	Description
VVG 400x200		Flexible anti-vibration inserts for round air ducts

For rectangular ducts

Name	Photo	Description

PR 400x200	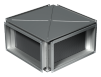	Cross-flow plate heat exchangers for rectangular air ducts

Mixing chambers

Name	Photo	Description
SKRA 400x200/24		Mixing chambers for mixing (recirculating) part of the exhaust air with the outdoor air in the appropriate proportion

Water heaters

Name	Photo	Description
NKV 400x200-2		Inline water supply air heaters or heater for air handling units with a rectangular cross-section
NKV 400x200-4		Inline water supply air heaters or heater for air handling units with a rectangular cross-section

Electrical heaters

Name	Photo	Description
NK 400x200-4,5-3		Rectangular electric inline heaters
NK 400x200-6,0-3		Rectangular electric inline heaters
NK 400x200-7,5-3		Rectangular electric inline heaters
NK 400x200-9,0-3		Rectangular electric inline heaters
NK 400x200-10,5-3		Rectangular electric inline heaters
NK 400x200-12,0-3		Rectangular electric inline heaters
NK 400x200-15,0-3		Rectangular electric inline heaters
NK 400x200-4,5-3 U		Rectangular electric inline heaters with control unit

NK 400x200-6,0-3 U		Rectangular electric inline heaters with control unit
NK 400x200-7,5-3 U		Rectangular electric inline heaters with control unit
NK 400x200-9,0-3 U		Rectangular electric inline heaters with control unit
NK 400x200-10,5-3 U		Rectangular electric inline heaters with control unit
NK 400x200-12,0-3 U		Rectangular electric inline heaters with control unit
NK 400x200-15,0-3 U		Rectangular electric inline heaters with control unit

Water coolers

Name	Photo	Description
OKW 400x200-3		Rectangular inline water coolers

Airflow regulators

Name	Photo	Description
RRV 400x200		Air flow controllers

Transformer speed controllers

Name	Photo	Description
RSA5D-1,5-M		Three phase speed controller

Freon coolers

Name	Photo	Description
OKF 400x200-3		Rectangular inline direct evaporative coolers

Ecodesign

Trademark	Vents
Model	VKPF 4D 400x200
Type of drive installed	External MSD or VSD
Type of heat recovery system	None
Nominal external pressure (Pa)	218
Maximum external leakage rates (%)	2.7
Static efficiency (%)	25
Effective electric power input (kW)	0.195
Sound power level (dB(A))	72
Declared typology	NRVU UVU