VKPF 4D 500x300



Centrifugal inline fans with forward curved blades

• Sound pressure level LpA at 3 m: 56
• Impeller type: Centrifugal impeller with forward curved blades
• Casing material: Galvanized steel
• Installation in any position

	Unit of measurement	VKPF 4D 500x300
Connected air duct size	mm	500x300
Phases	-	3
Minimum supply voltage	V	400
Maximum supply voltage	V	400
Power supply frequency	Hz	50
Rated power	W	855
Unit current	A	1.7
Maximum airflow	m³/h	2350
Rotation speed at 50hz	-	1300
Sound pressure level LpA at 3 m	dB(A)	56
Weight	kg	33
Transported air temperature (max)	°C	50
Transported air temperature (min)	°C	-20
Ingress protection rating	-	IPX4
Ingress protection rating of the drive	-	IP44
Impeller material	-	Galvanized steel

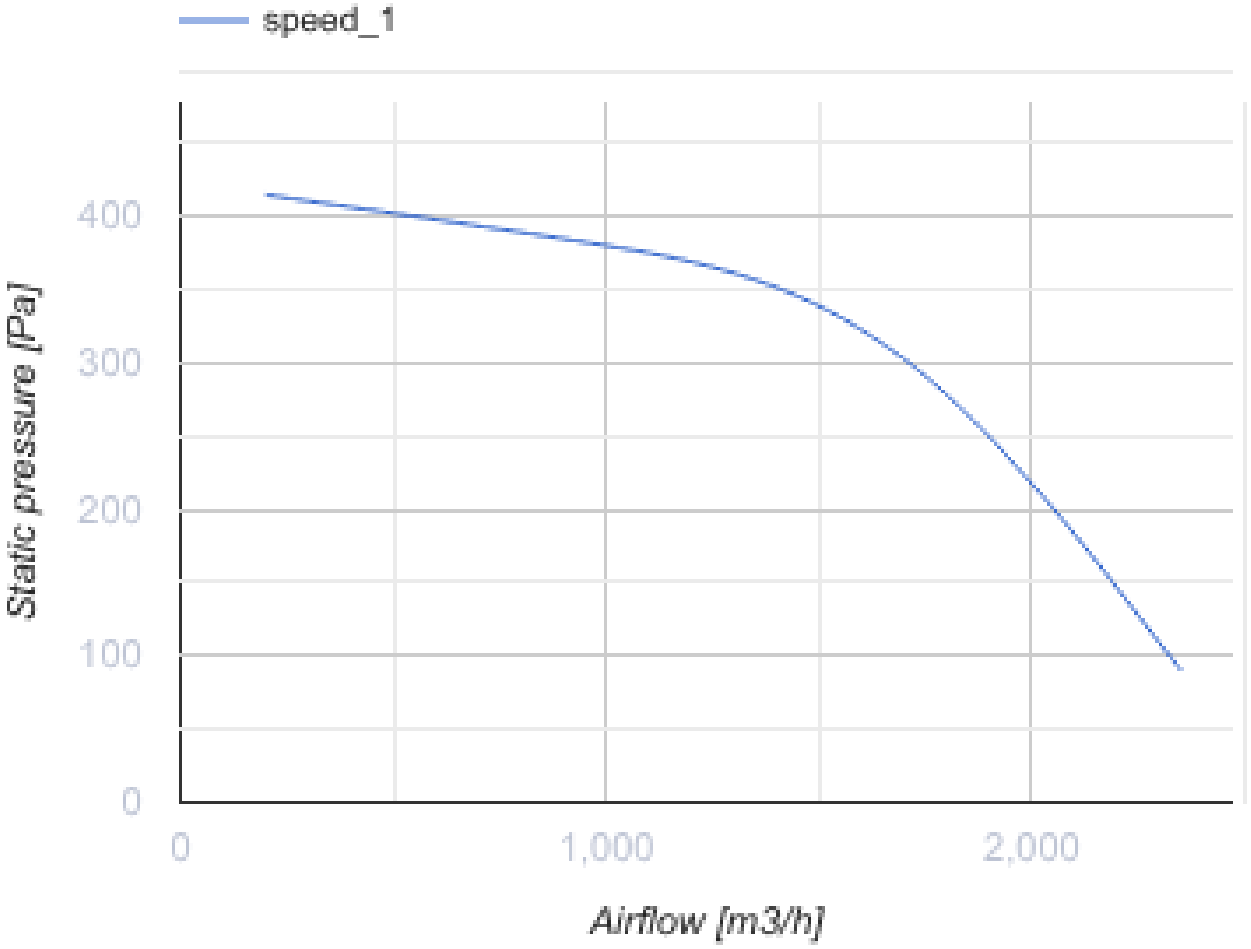
speed_1
Static pressure [Pa]
400
300
200
100
0
0
1,000
2,000
Airflow [m3/h]

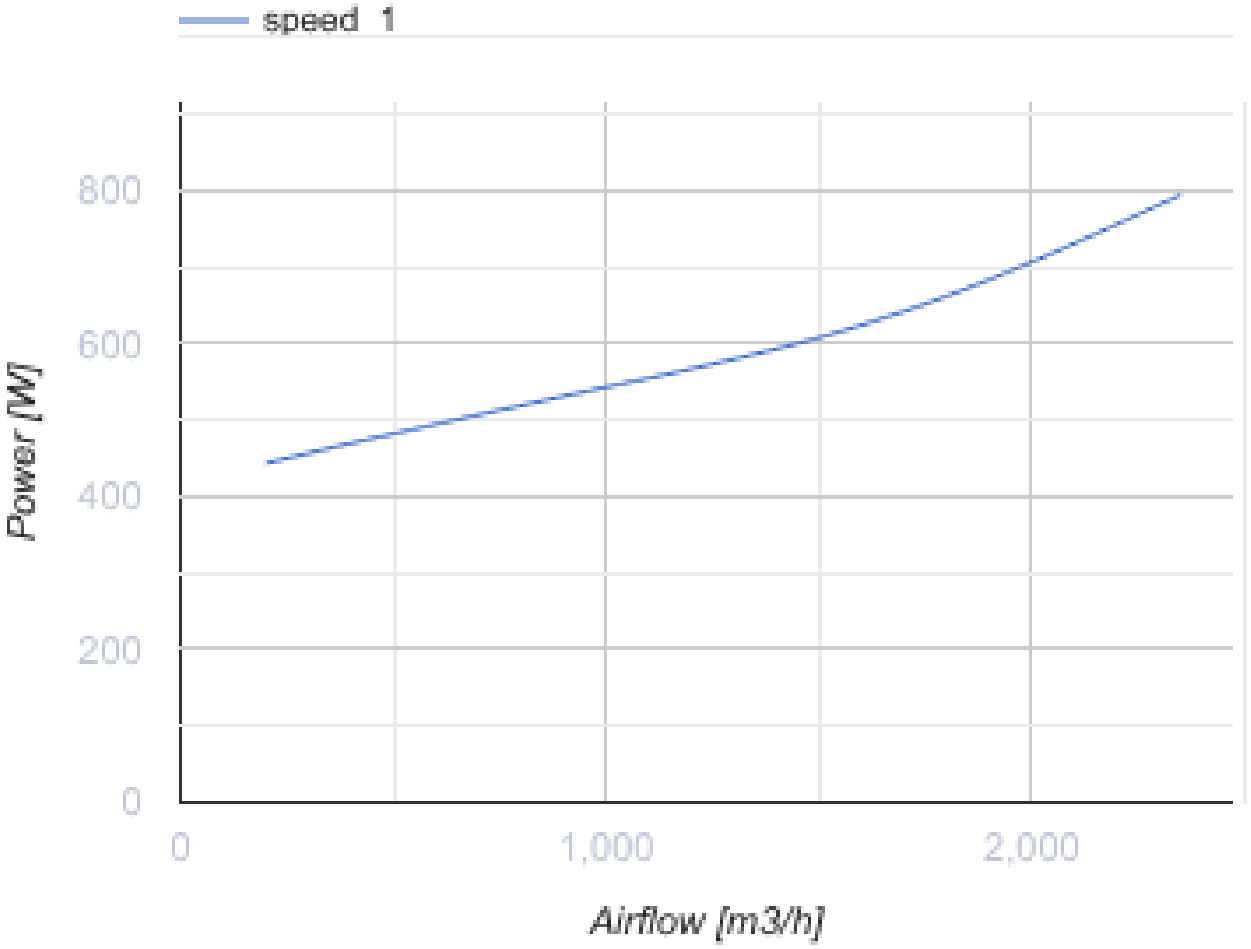

Dimensions

B	B1	B2	H	H1	H2	H3	L
500	520	540	300	320	340	365	680

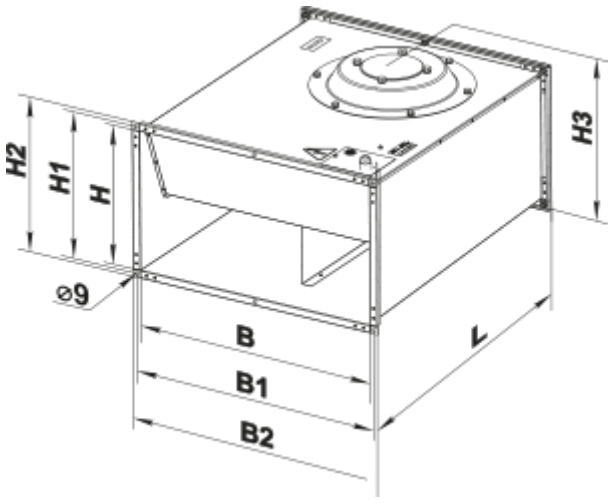

Accessories

For rectangular ducts

Name	Photo	Description
SR 500x300	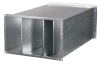	Plate silencer for installation in rectangular ducts

For rectangular ducts

Name	Photo	Description
FB 500x300		Rectangular panel air filters
FBK 500x300-4		Rectangular bag air filters
FBK 500x300-5		Rectangular bag air filters
FBK 500x300-7		Rectangular bag air filters

For rectangular ducts

Name	Photo	Description
KOM1 500x300		Backdraught gravity dampe for shutting off air flow in rectangular air ducts
KR 500x300		Air dampers for controlling air flow in rectangular air ducts
KG 500x300		Gravity valve for automatic airflow shut-off in round air ducts

For rectangular ducts

Name	Photo	Description
VVG 500x300		Flexible anti-vibration inserts for round air ducts

For rectangular ducts

Name	Photo	Description

PR 500x300	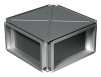	Cross-flow plate heat exchangers for rectangular air ducts

Mixing chambers

Name	Photo	Description
SKRA 500x300/24		Mixing chambers for mixing (recirculating) part of the exhaust air with the outdoor air in the appropriate proportion

Water heaters

Name	Photo	Description
NKV 500x300-2		Inline water supply air heaters or heater for air handling units with a rectangular cross-section
NKV 500x300-4		Inline water supply air heaters or heater for air handling units with a rectangular cross-section

Electrical heaters

Name	Photo	Description
NK 500x300-6,0-3		Rectangular electric inline heaters
NK 500x300-7,5-3		Rectangular electric inline heaters
NK 500x300-9,0-3		Rectangular electric inline heaters
NK 500x300-10,5-3		Rectangular electric inline heaters
NK 500x300-12,0-3		Rectangular electric inline heaters
NK 500x300-15,0-3		Rectangular electric inline heaters
NK 500x300-18,0-3		Rectangular electric inline heaters
NK 500x300-21,0-3		Rectangular electric inline heaters

NK 500x300-6,0-3 U		Rectangular electric inline heaters with control unit
NK 500x300-7,5-3 U		Rectangular electric inline heaters with control unit
NK 500x300-9,0-3 U		Rectangular electric inline heaters with control unit
NK 500x300-10,5-3 U		Rectangular electric inline heaters with control unit
NK 500x300-12,0-3 U		Rectangular electric inline heaters with control unit
NK 500x300-15,0-3 U		Rectangular electric inline heaters with control unit
NK 500x300-18,0-3 U		Rectangular electric inline heaters with control unit
NK 500x300-21,0-3 U		Rectangular electric inline heaters with control unit

Airflow regulators

Name	Photo	Description
RRV 500x300		Air flow controllers

Water coolers

Name	Photo	Description
OKW 500x300-3		Rectangular inline water coolers

Freon coolers

Name	Photo	Description
OKF 500x300-3		Rectangular inline direct evaporative coolers

Transformer speed controllers

Name	Photo	Description

RSA5D-4,0-M		Three phase speed controller

Ecodesign

Trademark	Vents
Model	VKPF 4D 500x300
Type of drive installed	External MSD or VSD
Type of heat recovery system	None
Nominal external pressure (Pa)	345
Maximum external leakage rates (%)	2.7
Static efficiency (%)	22.6
Declared typology	NRVU UVU
Effective electric power input (kW)	0.593
Sound power level (dB(A))	76