VKPF 6D 800x500



Centrifugal inline fans with forward curved blades

• Sound pressure level LpA at 3 m: 59
• Impeller type: Centrifugal impeller with forward curved blades
• Casing material: Galvanized steel
• Installation in any position

	Unit of measurement	VKPF 6D 800x500
Connected air duct size	mm	800x500
Phases	-	3
Maximum supply voltage	V	400
Minimum supply voltage	V	400
Power supply frequency	Hz	50
Rated power	W	2790
Unit current	A	5.18
Maximum airflow	m³/h	7610
Rotation speed at 50hz	-	830
Sound pressure level LpA at 3 m	dB(A)	59
Weight	kg	70
Transported air temperature (max)	°C	50
Transported air temperature (min)	°C	-20
Ingress protection rating	-	IPX4
Ingress protection rating of the drive	-	IP44
Impeller material	-	Galvanized steel

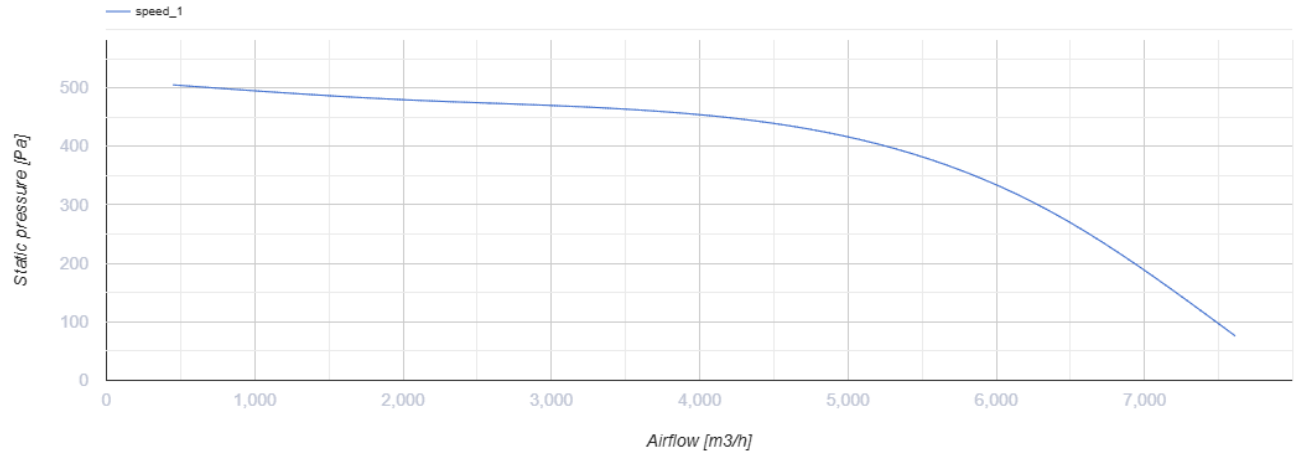

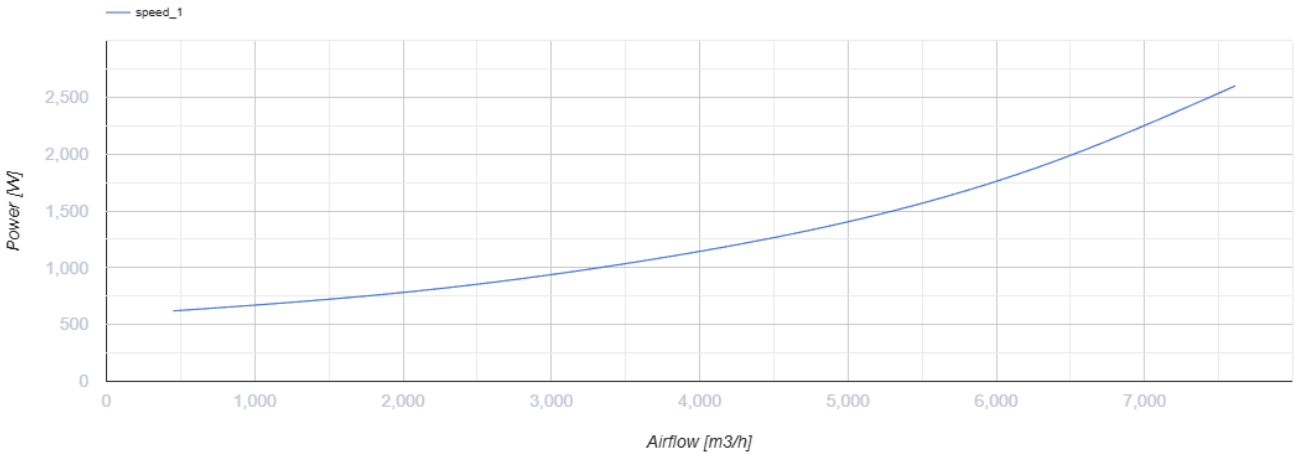

Dimensions

B	B1	B2	H	H1	H2	H3	L
800	820	840	500	520	540	580	820

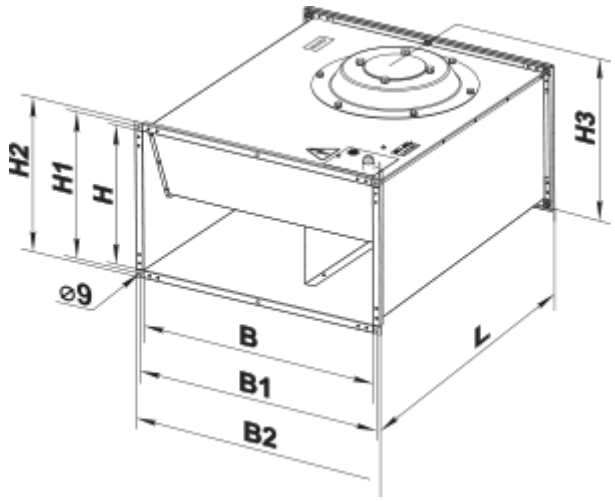

Accessories

For rectangular ducts

Name	Photo	Description
SR 800x500	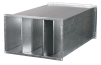	Plate silencer for installation in rectangular ducts

For rectangular ducts

Name	Photo	Description
FB 800x500		Rectangular panel air filters
FBK 800x500-4		Rectangular bag air filters
FBK 800x500-5		Rectangular bag air filters
FBK 800x500-7		Rectangular bag air filters

For rectangular ducts

Name	Photo	Description
KG 800x500		Gravity valve for automatic airflow shut-off in round air ducts

For rectangular ducts

Name	Photo	Description
VVG 800x500		Flexible anti-vibration inserts for round air ducts

For rectangular ducts

Name	Photo	Description
PR 800x500	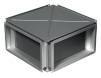	Cross-flow plate heat exchangers for rectangular air ducts

Mixing chambers

Name	Photo	Description

SKRA 800x500/24		Mixing chambers for mixing (recirculating) part of the exhaust air with the outdoor air in the appropriate proportion

Water heaters

Name	Photo	Description
NKV 800x500-2		Inline water supply air heaters or heater for air handling units with a rectangular cross-section
NKV 800x500-3		Inline water supply air heaters or heater for air handling units with a rectangular cross-section

Electrical heaters

Name	Photo	Description
NK 800x500-27,0-3		Rectangular electric inline heaters
NK 800x500-36,0-3		Rectangular electric inline heaters
NK 800x500-54,0-3		Rectangular electric inline heaters
NK 800x500-27,0-3 U		Rectangular electric inline heaters with control unit
NK 800x500-36,0-3 U		Rectangular electric inline heaters with control unit
NK 800x500-54,0-3 U		Rectangular electric inline heaters with control unit

Airflow regulators

Name	Photo	Description
RRV 800x500		Air flow controllers

Transformer speed controllers

Name	Photo	Description

RSA5D-6,0-M		Three phase speed controller

Water coolers

Name	Photo	Description
OKW 800x500-3		Rectangular inline water coolers

Freon coolers

Name	Photo	Description
OKF 800x500-3		Rectangular inline direct evaporative coolers

Ecodesign

Trademark	Vents
Model	VKPF 6D 800x500
Type of drive installed	External MSD or VSD
Type of heat recovery system	None
Nominal external pressure (Pa)	457
Maximum external leakage rates (%)	2.7
Static efficiency (%)	43.6
Effective electric power input (kW)	1.15
Sound power level (dB(A))	79
Declared typology	NRVU UVU