# VKV 400 EC

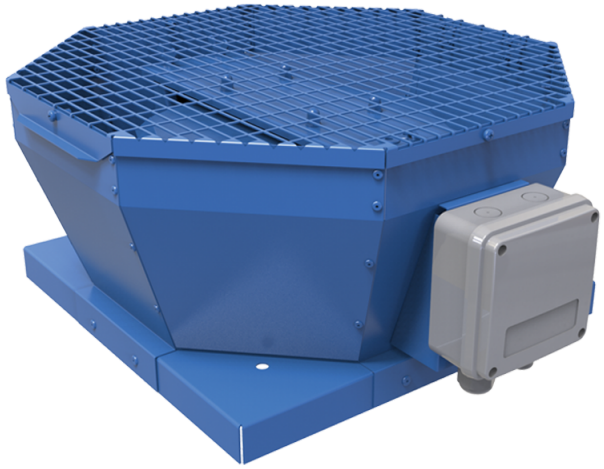

Roof centrifugal fans with vertical air discharge with EC-motors

• Sound pressure level LpA at 3 m: 58
• Impeller type: Centrifugal impeller with backward curved blades
• Casing material: Coated steel

| | Unit of measurement | VKV 400 EC |
|---|---|---|
| Phases | - | 1 |
| Minimum supply voltage | V | 230 |
| Maximum supply voltage | V | 230 |
| Power supply frequency | Hz | 50/60 |
| Rated power | W | 526 |
| Unit current | A | 3.9 |
| Maximum airflow | m³/h | 5380 |
| Rotation speed at 50hz | - | 1450 |
| Sound pressure level LpA at 3 m | dB(A) | 58 |
| Weight | kg | 27 |
| Transported air temperature (max) | °C | 50 |
| Transported air temperature (min) | °C | -25 |
| Ingress protection rating | - | IPX4 |
| Ingress protection rating of the drive | - | IP54 |
| Impeller material | - | Aluminium |
| Size | mm | 400 |

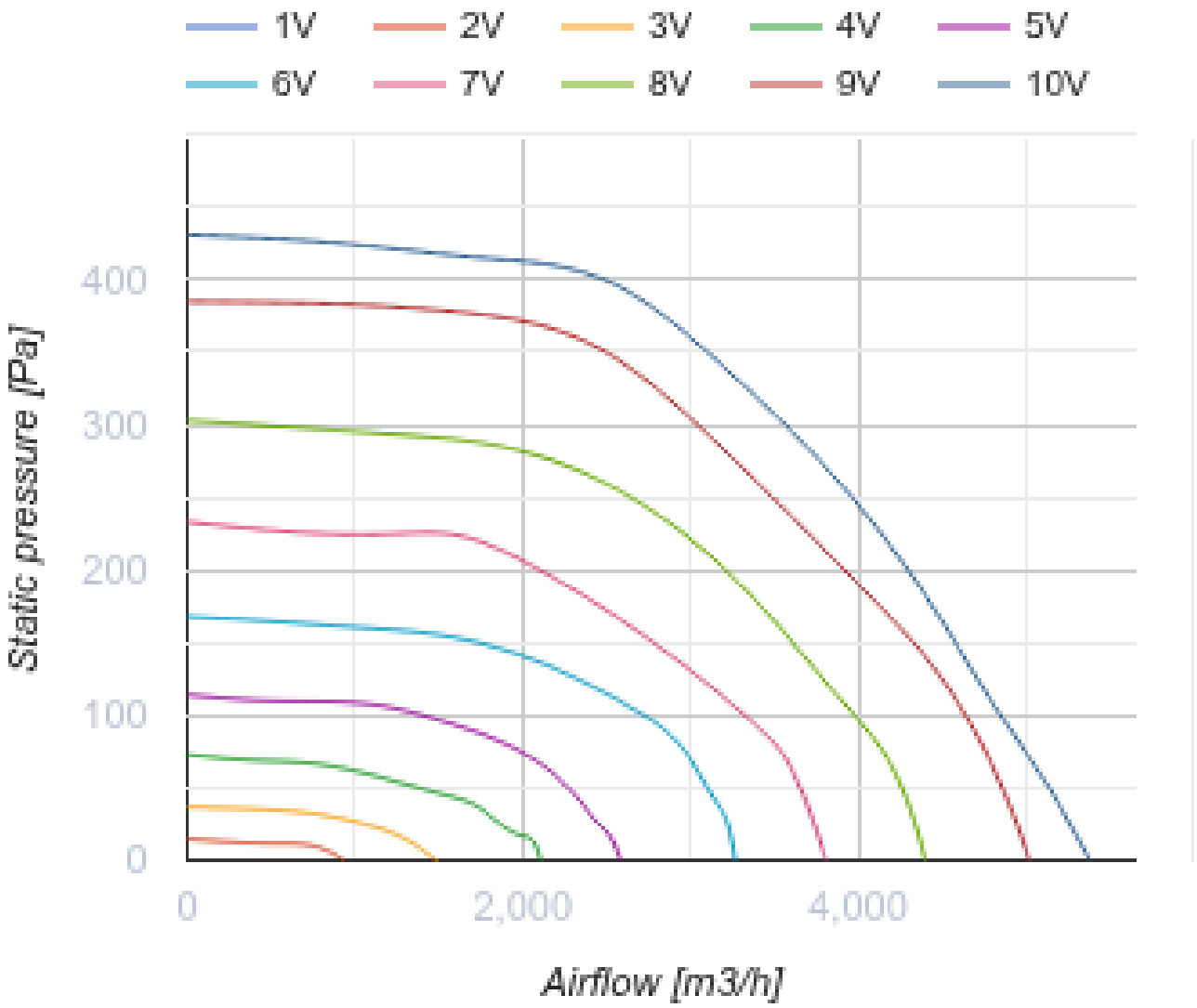
1V
2V
3V
4V
5V
6V
7V
8V
9V
10V
400
300
200
100
0
Static pressure [Pa]
0
2,000
4,000
Airflow [m3/h]

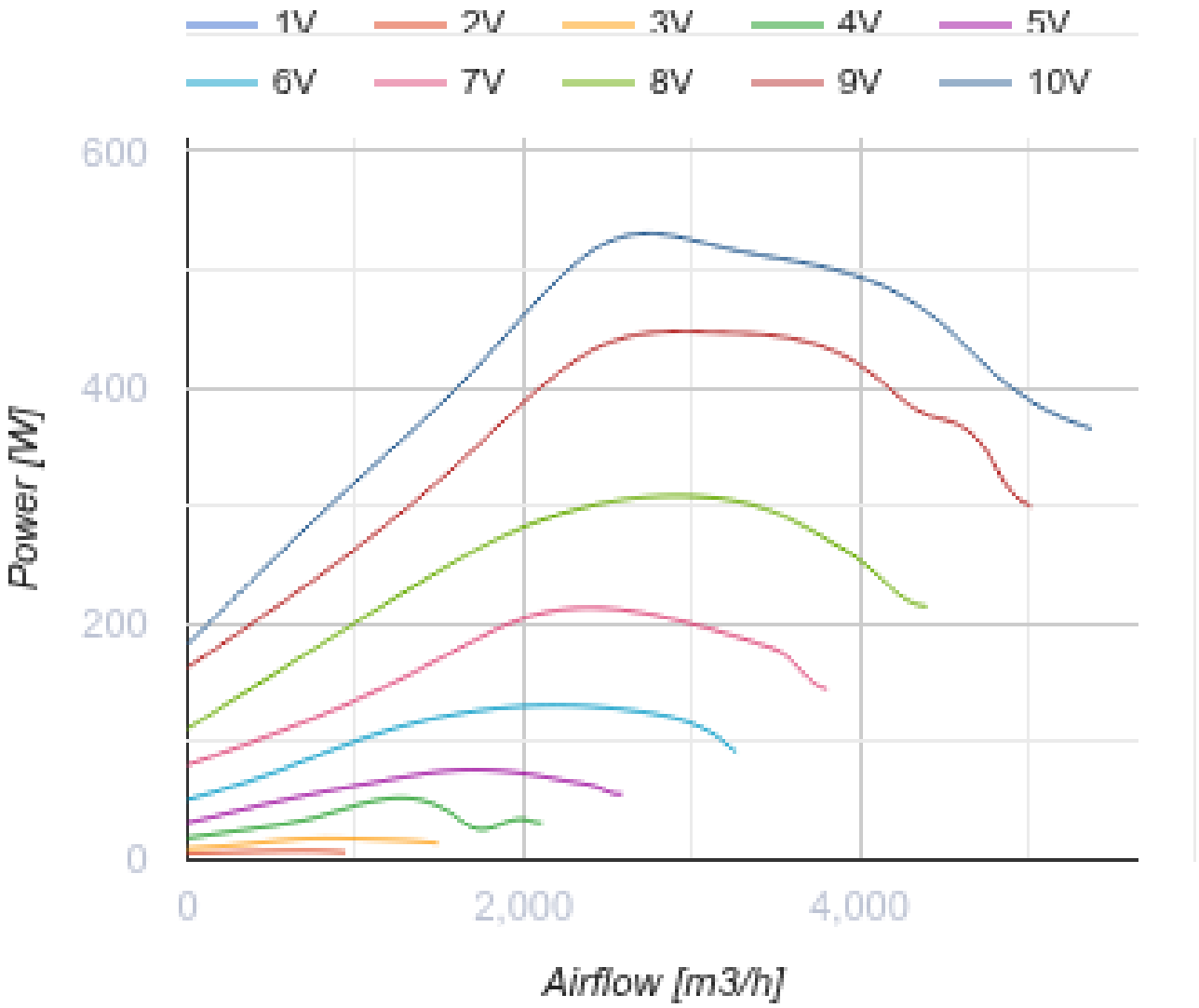


## Dimensions

| A | B | C |
|---|---|---|
| 738 | 598 | 371 |

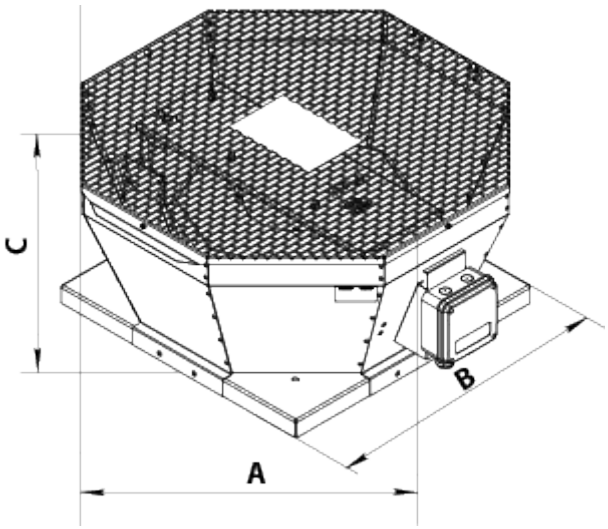


## Accessories

### Speed controllers for EC motors

| Name | Photo | Description |
|---|---|---|
| R-1/010 |  | Speed controller for EC motors |

### Accessories for roof fans

| Name | Photo | Description |
|---|---|---|
| RKV 355-400 |  | Mounting frame |
| RKVI 355-400 |  | Mounting frame with thermal-insulating layer |
| FKV 355-500 |  | Mating flange |
| GKV 355-500 |  | Flexible connector |
| KKV 355-500 |  | Backdraft damper |

## Ecodesign

| Trademark | Vents |
|---|---|
| Model | VKV 400 EC |
| Type of drive installed | Integrated VSD |
| Type of heat recovery system | None |
| Nominal external pressure (Pa) | 420 |
| Maximum external leakage rates (%) | 2.7 |
| Static efficiency (%) | 53.3 |
| Sound power level (dB(A)) | 73 |
| Effective electric power input (kW) | 0.77 |
| Declared typology | NRVU UVU |