VKV 4E 225

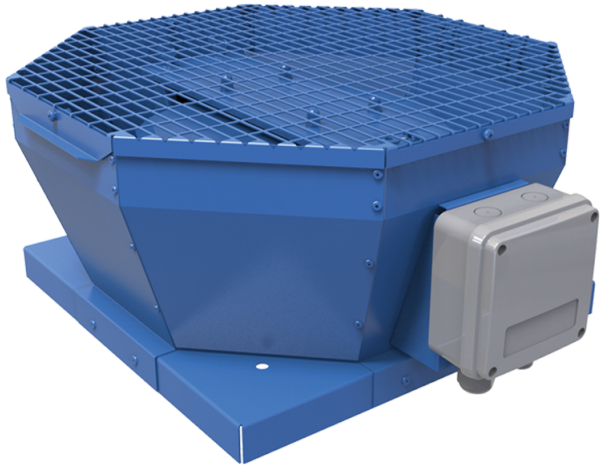

Roof centrifugal fans with vertical air discharge

• Sound pressure level LpA at 3 m: 45
• Impeller type: Centrifugal impeller with backward curved blades
• Casing material: Coated steel

	Unit of measurement	VKV 4E 225
Phases	-	1
Minimum supply voltage	V	230
Maximum supply voltage	V	230
Power supply frequency	Hz	50
Rated power	W	49
Unit current	A	0.22
Maximum airflow	m³/h	738
Rotation speed at 50hz	-	1400
Sound pressure level LpA at 3 m	dB(A)	45
Weight	kg	7
Transported air temperature (max)	°C	50
Transported air temperature (min)	°C	-25
Ingress protection rating	-	IPX4
Ingress protection rating of the drive	-	IP44
Impeller material	-	Plastic
Size	mm	225

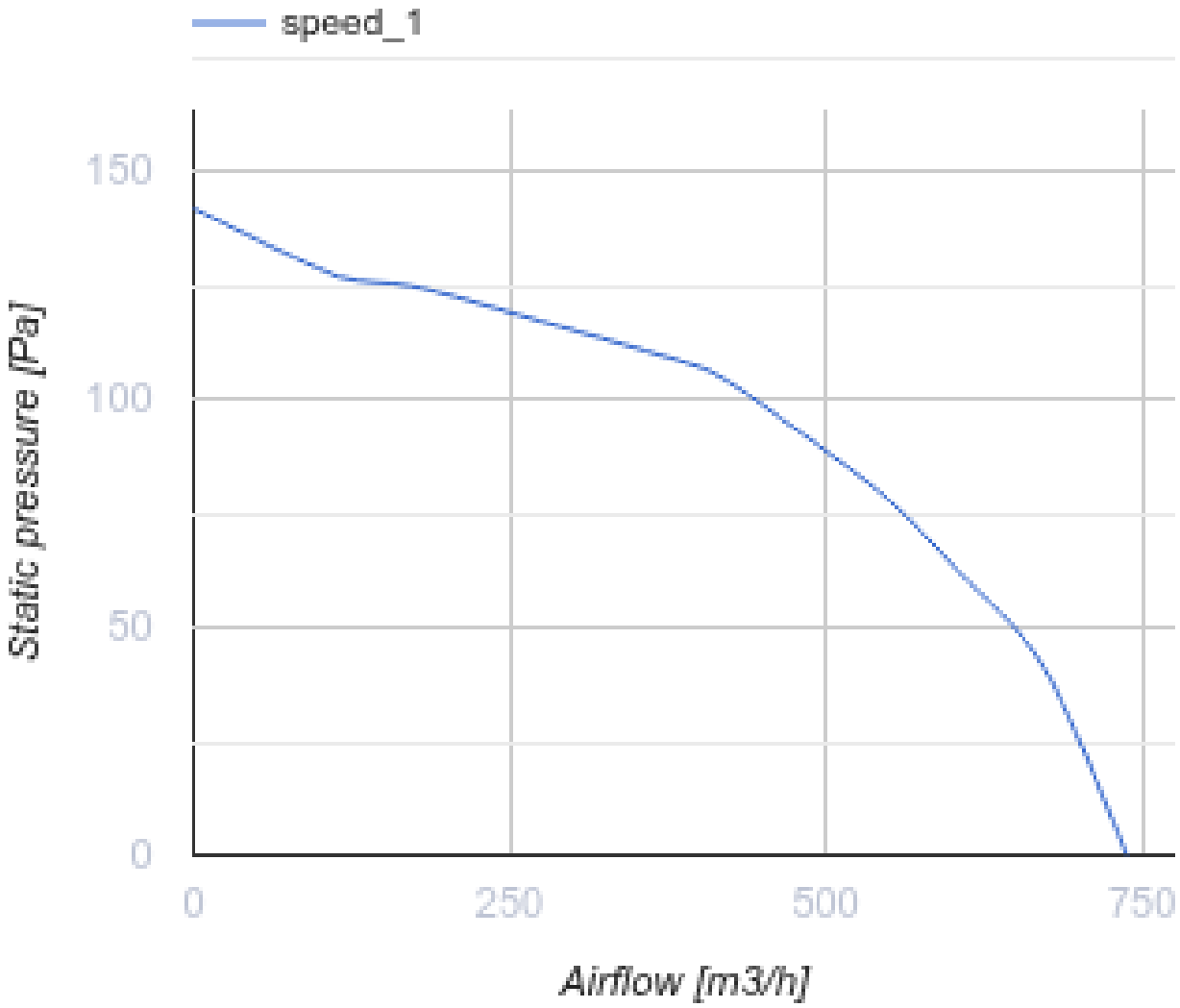
speed_1
150
100
50
0
Static pressure [Pa]
0
250
500
750
Airflow [m3/h]

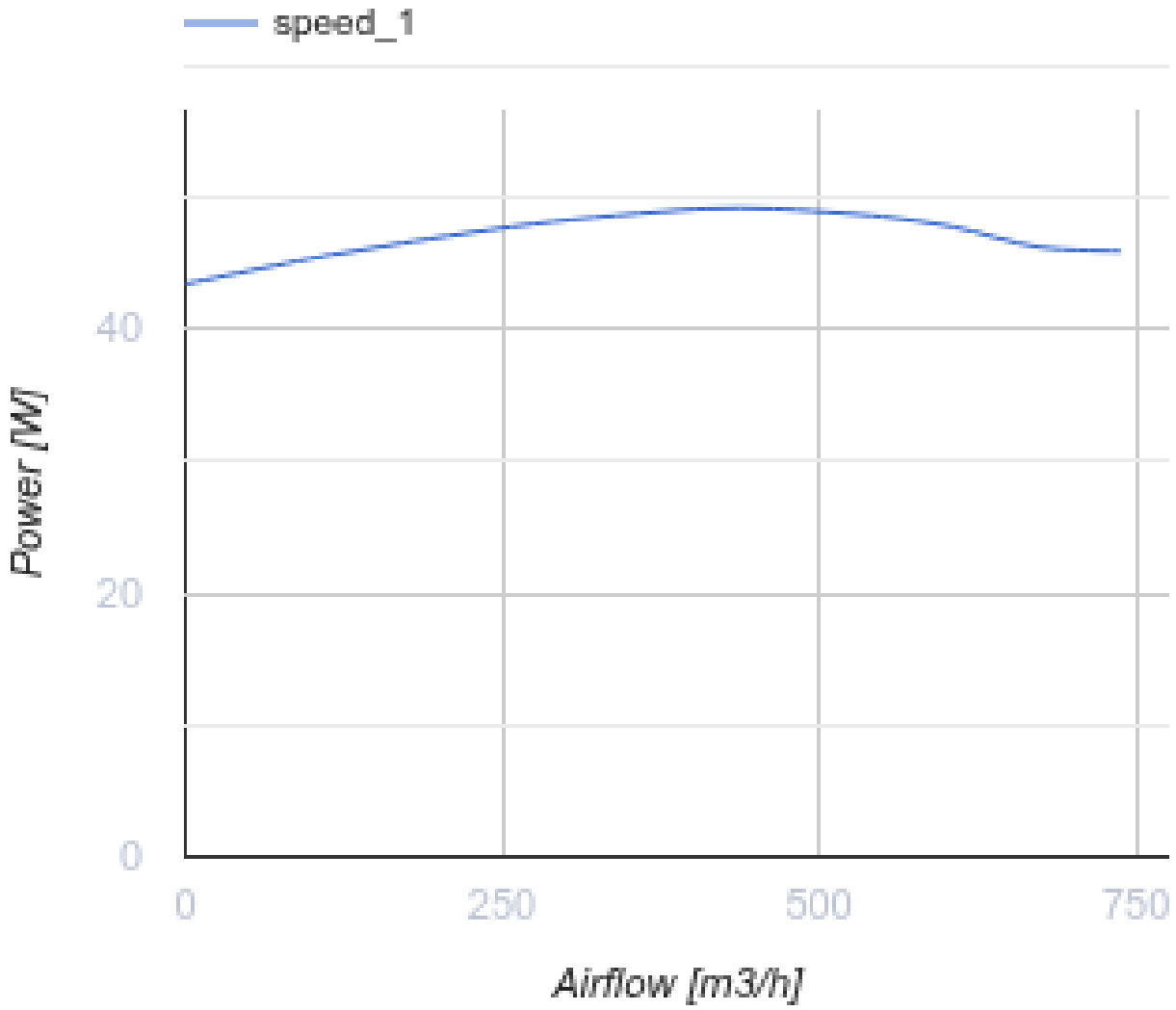

Dimensions

A	B	H	ØD
417	355	215	210

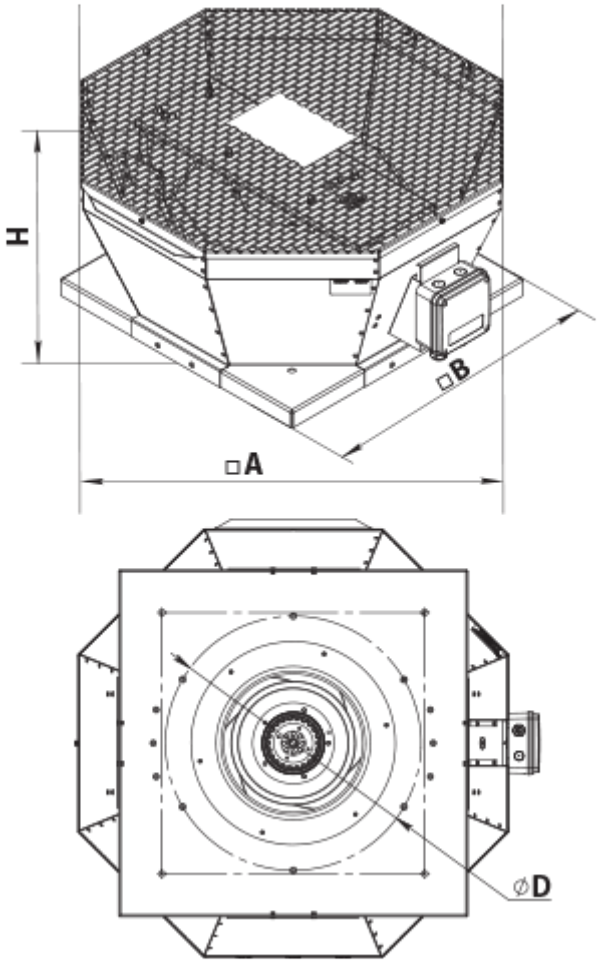

Accessories

Accessories for roof fans

Name	Photo	Description
RKV 220-225		Mounting frame
RKVI 220-225		Mounting frame with thermal-insulating layer
FKV 220-225		Mating flange
GKV 220-225		Flexible connector
KKV 220-225		Backdraft damper