# VKV 4E 310

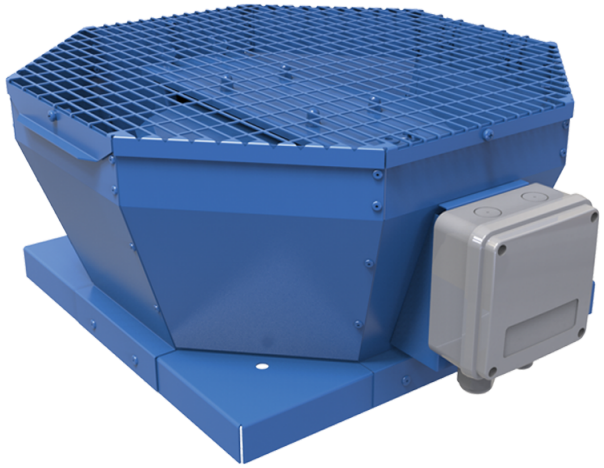

Roof centrifugal fans with vertical air discharge

• Sound pressure level LpA at 3 m: 47
• Impeller type: Centrifugal impeller with backward curved blades
• Casing material: Coated steel

| | Unit of measurement | VKV 4E 310 |
|---|---|---|
| Phases | - | 1 |
| Minimum supply voltage | V | 230 |
| Maximum supply voltage | V | 230 |
| Power supply frequency | Hz | 50/60 |
| Rated power | W | 141 |
| Unit current | A | 0.64 |
| Maximum airflow | m³/h | 2265 |
| Rotation speed at 50hz | - | 1420 |
| Sound pressure level LpA at 3 m | dB(A) | 47 |
| Weight | kg | 20 |
| Transported air temperature (max) | °C | 50 |
| Transported air temperature (min) | °C | -25 |
| Ingress protection rating | - | IPX4 |
| Ingress protection rating of the drive | - | IP54 |
| Impeller material | - | Aluminium |
| Size | mm | 310 |

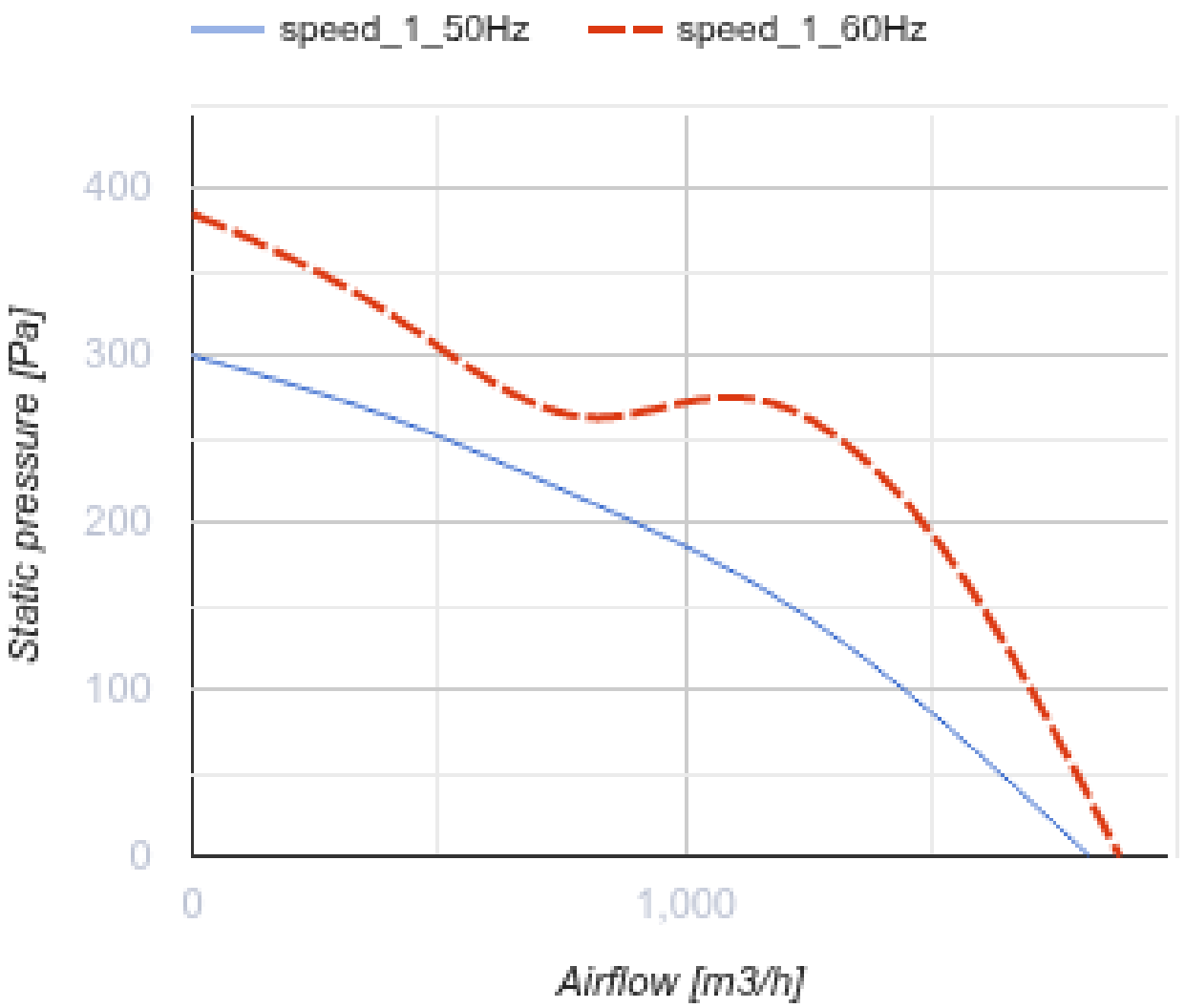
speed_1_50Hz
speed_1_60Hz
400
300
200
100
0
0
1,000
Static pressure [Pa]
Airflow [m3/h]

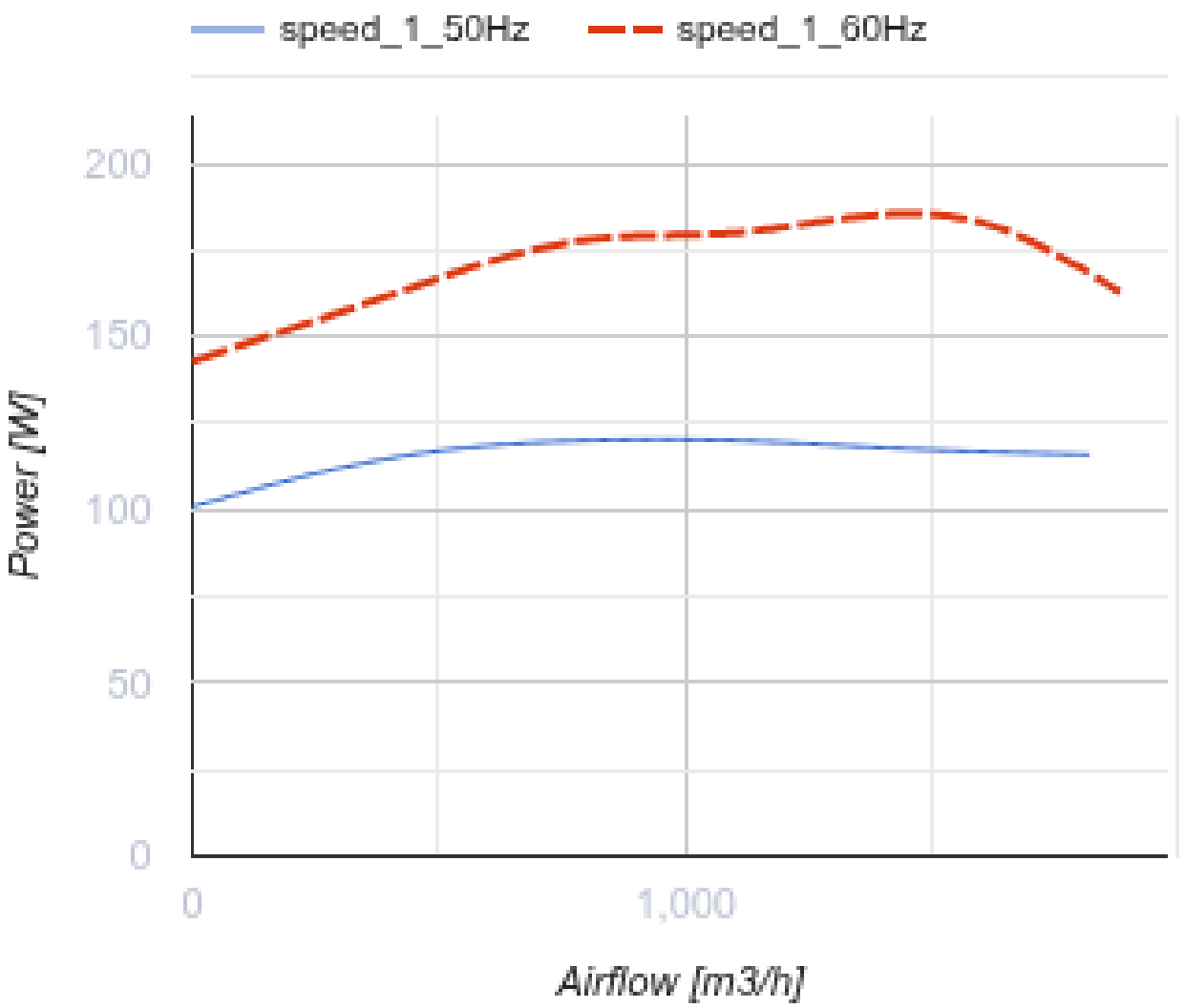


## Dimensions

| A | B | H | ØD |
|---|---|---|---|
| 613 | 477 | 300 | 285 |

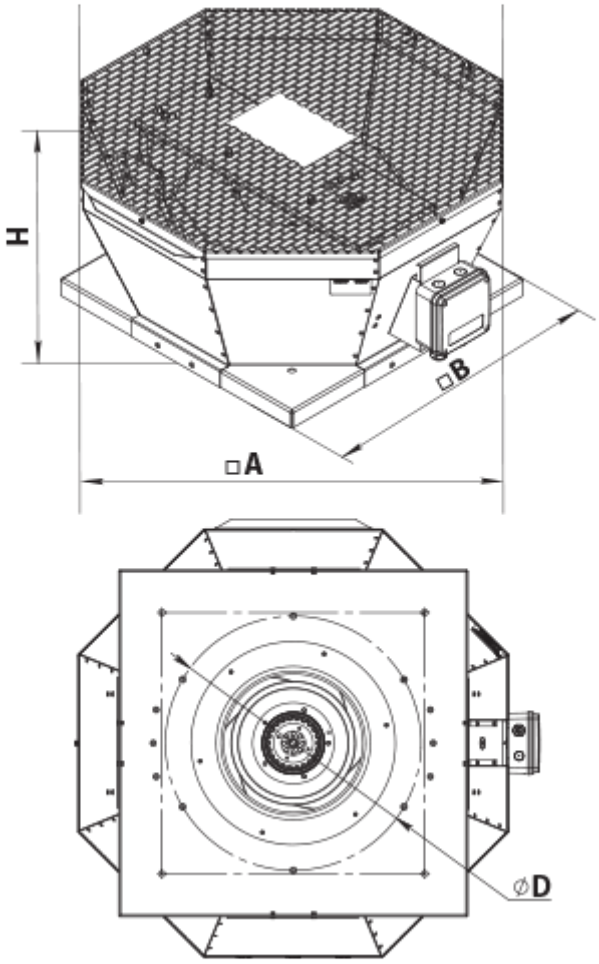


## Accessories

### Accessories for roof fans

| Name | Photo | Description |
|---|---|---|
| RKV 250-315 |  | Mounting frame |
| RKVI 250-315 |  | Mounting frame with thermal-insulating layer |
| FKV 250-315 |  | Mating flange |
| GKV 250-315 |  | Flexible connector |
| KKV 250-315 |  | Backdraft damper |

## Ecodesign

| Trademark | Vents |
|---|---|
| Model | VKV 4E 310 |
| Type of drive installed | External MSD or VSD |
| Type of heat recovery system | None |
| Nominal external pressure (Pa) | 175 |
| Maximum external leakage rates (%) | 2.7 |
| Static efficiency (%) | 40.6 |
| Sound power level (dB(A)) | 65 |
| Effective electric power input (kW) | 0.129 |
| Declared typology | NRVU UVU |