VKV 4E 355

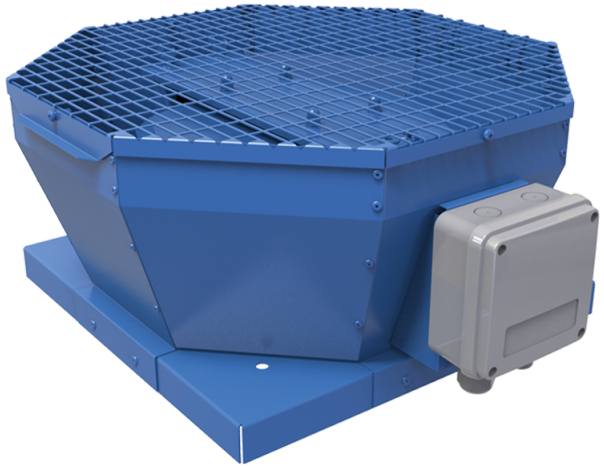

Roof centrifugal fans with vertical air discharge

• Sound pressure level LpA at 3 m: 51
• Impeller type: Centrifugal impeller with backward curved blades
• Casing material: Coated steel

	Unit of measurement	VKV 4E 355
Phases	-	1
Minimum supply voltage	V	230
Maximum supply voltage	V	230
Power supply frequency	Hz	50/60
Rated power	W	219
Unit current	A	0.96
Maximum airflow	m³/h	2480
Rotation speed at 50hz	-	1420
Sound pressure level LpA at 3 m	dB(A)	51
Weight	kg	26
Transported air temperature (max)	°C	50
Transported air temperature (min)	°C	-25
Ingress protection rating	-	IPX4
Ingress protection rating of the drive	-	IP54
Impeller material	-	Aluminium
Size	mm	355

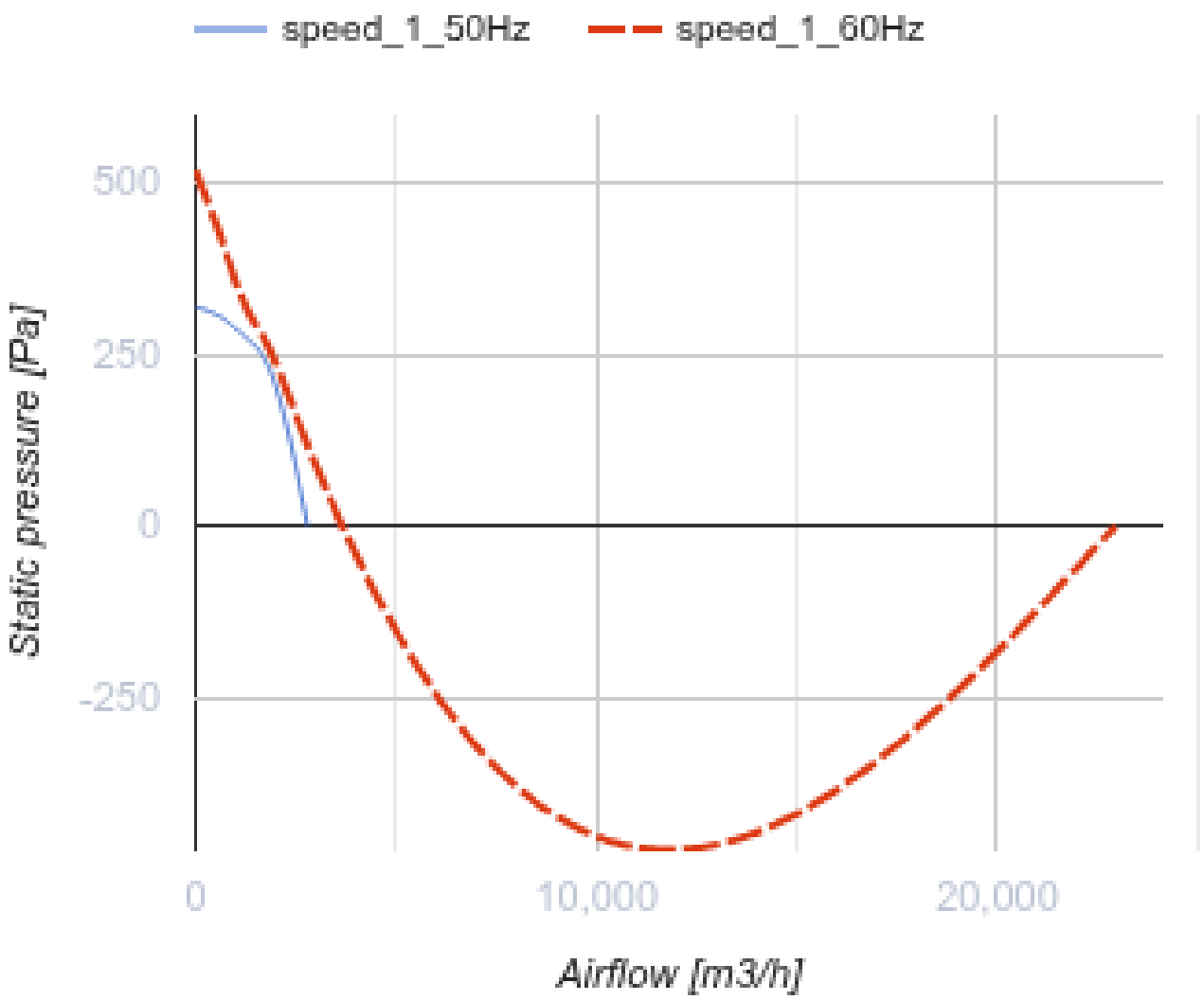
speed_1_50Hz
speed_1_60Hz
500
250
0
-250
Static pressure [Pa]
0
10,000
20,000
Airflow [m3/h]

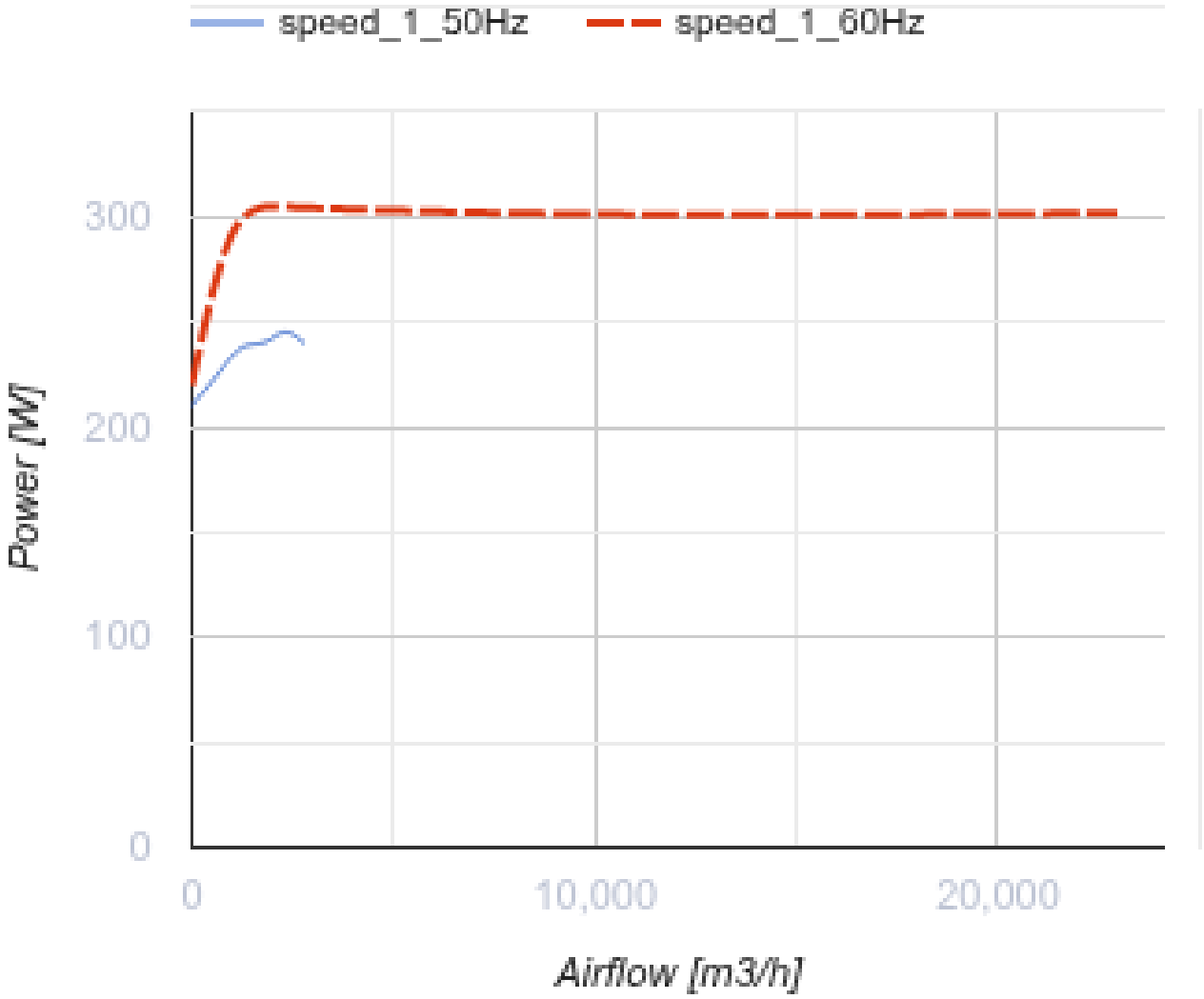

Dimensions

A	B	H	ØD
738	598	330	438

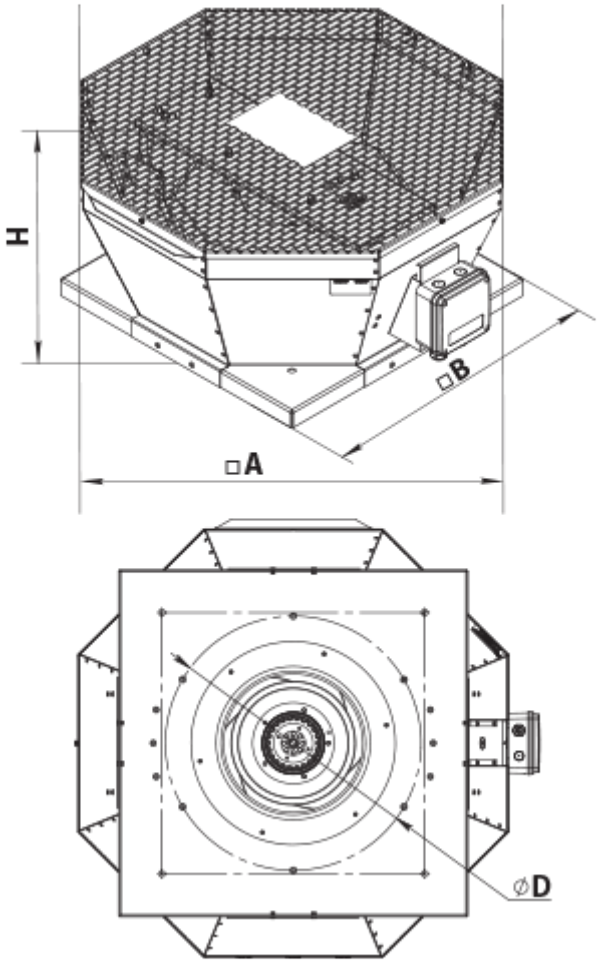

Accessories

Accessories for roof fans

Name	Photo	Description
RKV 355-400		Mounting frame
RKVI 355-400		Mounting frame with thermal-insulating layer
FKV 355-500		Mating flange
GKV 355-500		Flexible connector
KKV 355-500		Backdraft damper

Ecodesign

Trademark	Vents
Model	VKV 4E 355
Type of drive installed	External MSD or VSD
Type of heat recovery system	None
Nominal external pressure (Pa)	264
Maximum external leakage rates (%)	2.7
Static efficiency (%)	46
Declared typology	NRVU UVU
Effective electric power input (kW)	0.224
Sound power level (dB(A))	66