# VKV 6D 500

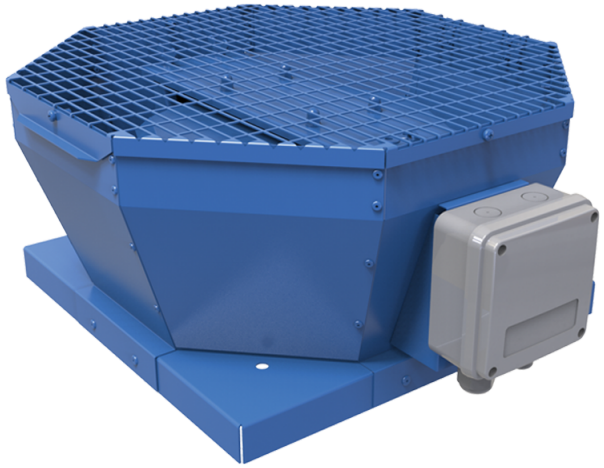

Roof centrifugal fans with vertical air discharge

• Sound pressure level LpA at 3 m: 52
• Impeller type: Centrifugal impeller with backward curved blades
• Casing material: Coated steel

| | Unit of measurement | VKV 6D 500 |
|---|---|---|
| Phases | - | 3 |
| Minimum supply voltage | V | 400 |
| Maximum supply voltage | V | 400 |
| Power supply frequency | Hz | 50/60 |
| Rated power | W | 440 |
| Unit current | A | 1.23 |
| Maximum airflow | m³/h | 6000 |
| Rotation speed at 50hz | - | 978 |
| Sound pressure level LpA at 3 m | dB(A) | 52 |
| Weight | kg | 52 |
| Transported air temperature (max) | °C | 60 |
| Transported air temperature (min) | °C | -25 |
| Ingress protection rating | - | IPX4 |
| Ingress protection rating of the drive | - | IP54 |
| Impeller material | - | Aluminium |
| Size | mm | 500 |

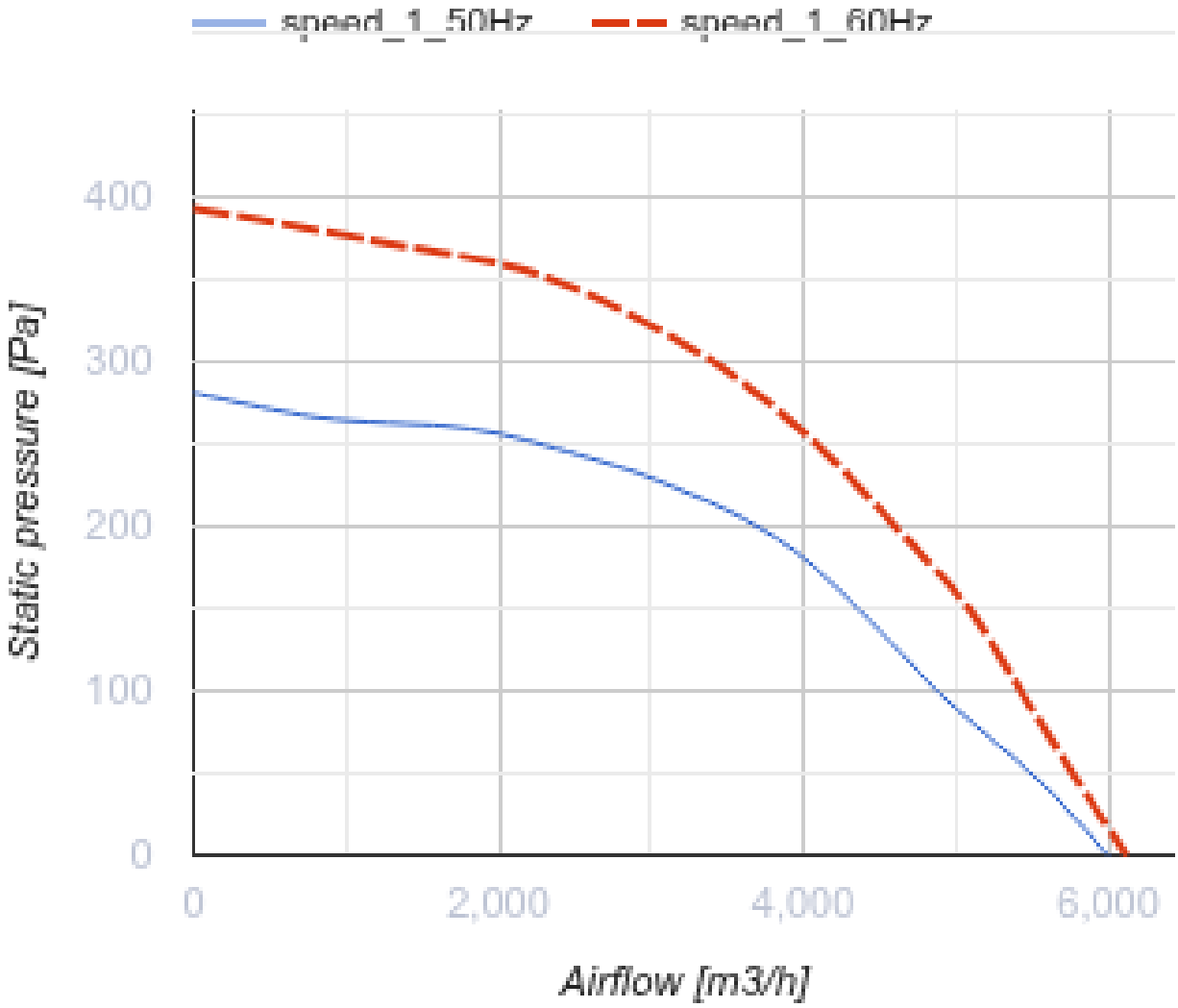
speed_1_50Hz
speed_1_60Hz
400
300
200
100
0
Static pressure [Pa]
0
2,000
4,000
6,000
Airflow [m3/h]

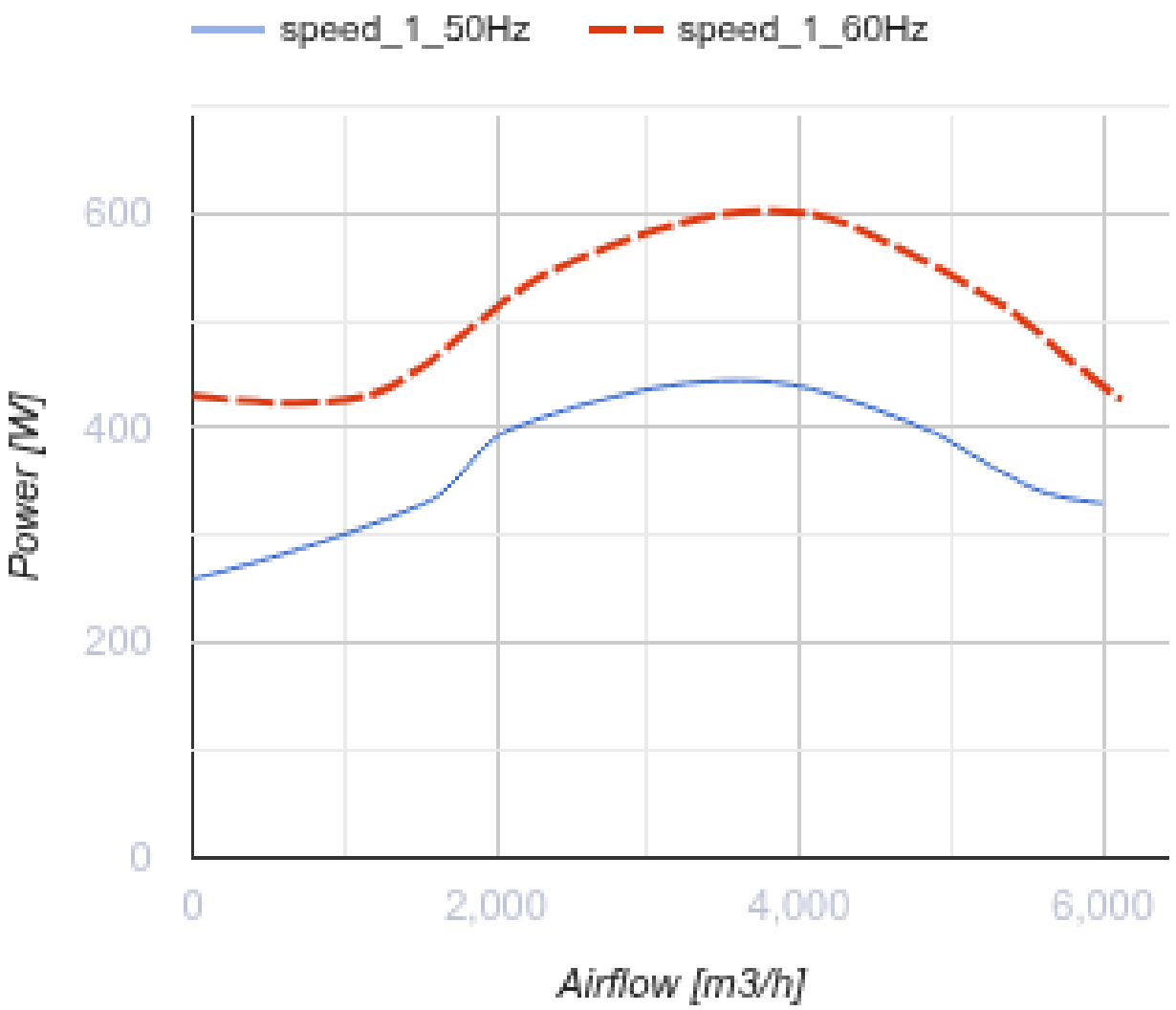


## Dimensions

| A | B | H | ØD |
|---|---|---|---|
| 859 | 668 | 460 | 445 |

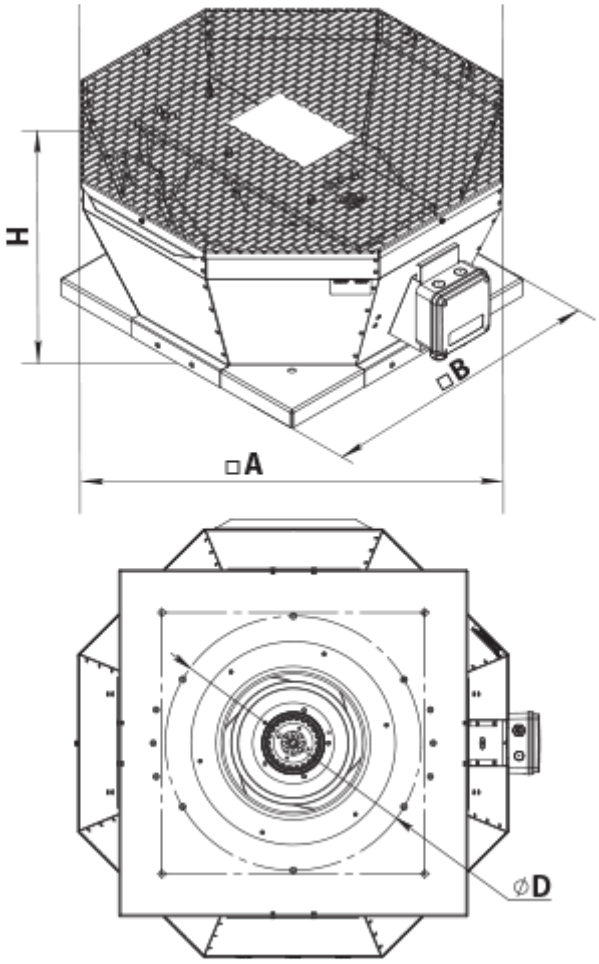


## Accessories

### Transformer speed controllers

| Name | Photo | Description |
|---|---|---|
| RSA5D-1,5-M |  | Three phase speed controller |

### Accessories for roof fans

| Name | Photo | Description |
|---|---|---|
| RKV 450-500 |  | Mounting frame |
| RKVI 450-500 |  | Mounting frame with thermal-insulating layer |
| FKV 355-500 |  | Mating flange |

| | | |
|---|---|---|
| GKV 355-500 |  | Flexible connector |
| KKV 355-500 |  | Backdraft damper |