VKV 6E 400

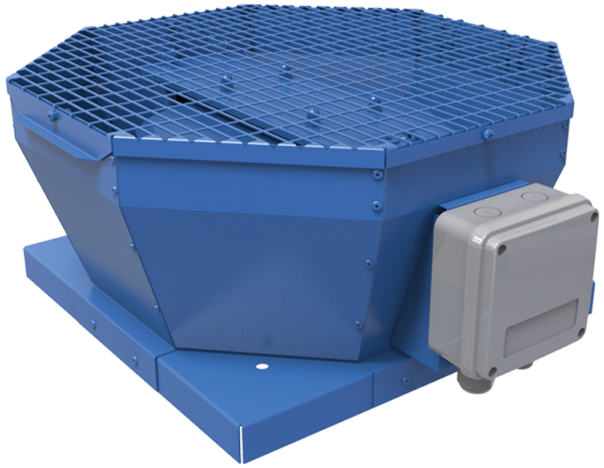

Roof centrifugal fans with vertical air discharge

• Sound pressure level LpA at 3 m: 47
• Impeller type: Centrifugal impeller with backward curved blades
• Casing material: Coated steel

	Unit of measurement	VKV 6E 400
Phases	-	1
Minimum supply voltage	V	230
Maximum supply voltage	V	230
Power supply frequency	Hz	50/60
Rated power	W	184
Unit current	A	0.89
Maximum airflow	m³/h	2740
Rotation speed at 50hz	-	945
Sound pressure level LpA at 3 m	dB(A)	47
Weight	kg	31
Transported air temperature (max)	°C	60
Transported air temperature (min)	°C	-30
Ingress protection rating	-	IPX4
Ingress protection rating of the drive	-	IP54
Impeller material	-	Aluminium
Size	mm	400

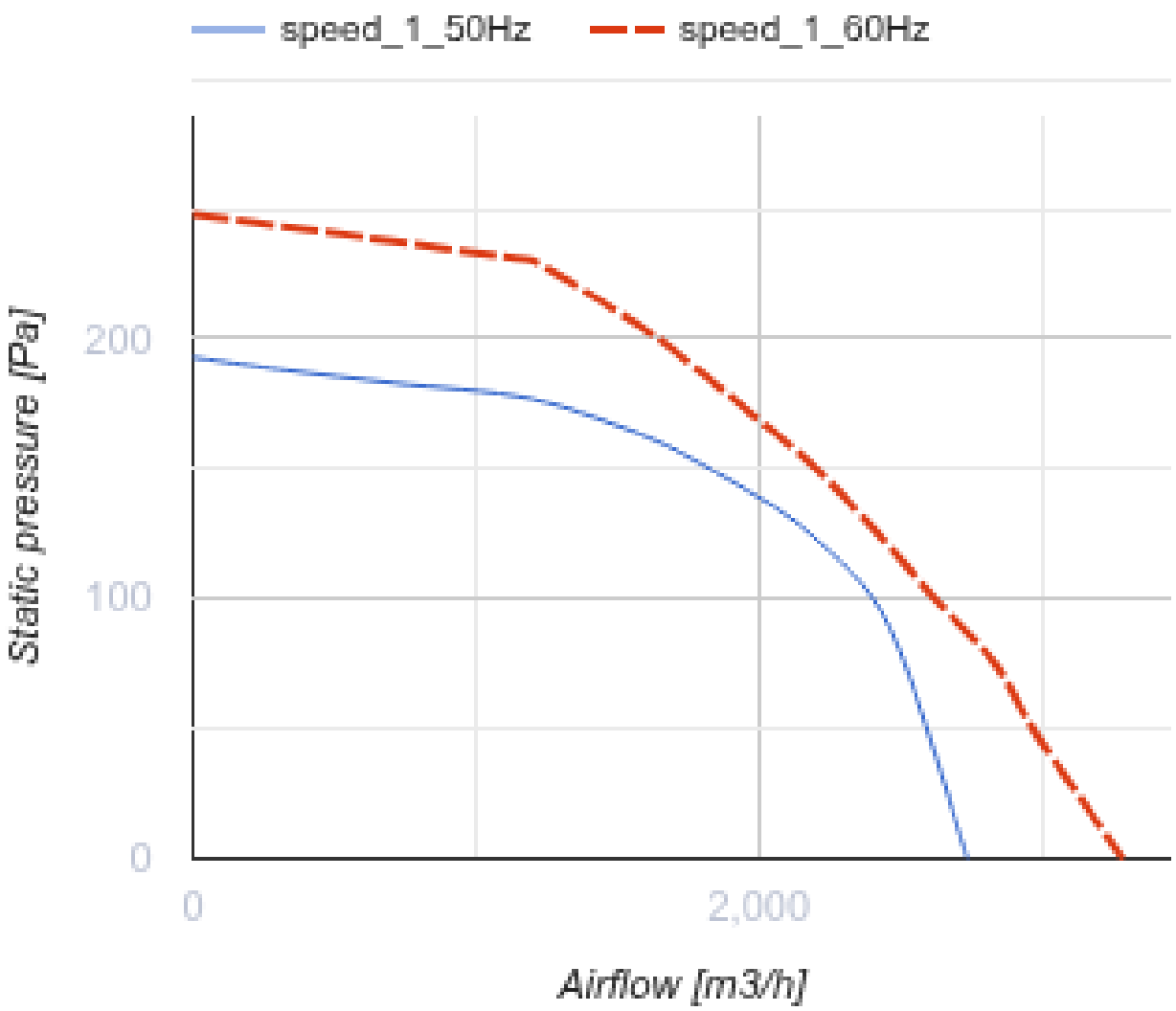
speed_1_50Hz
speed_1_60Hz
Static pressure [Pa]
200
100
0
0
2,000
Airflow [m3/h]

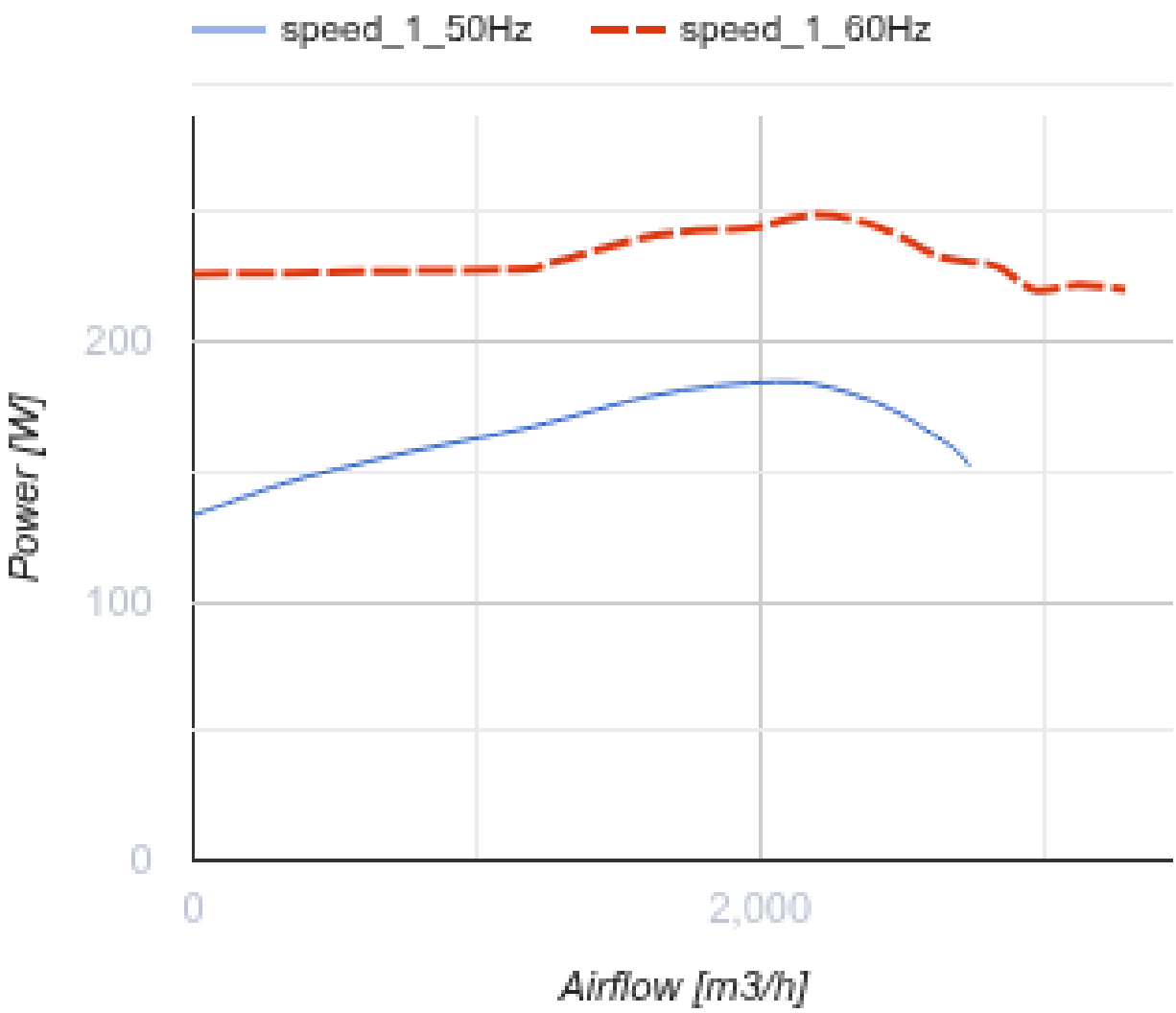

Dimensions

A	B	H	ØD
738	598	375	438

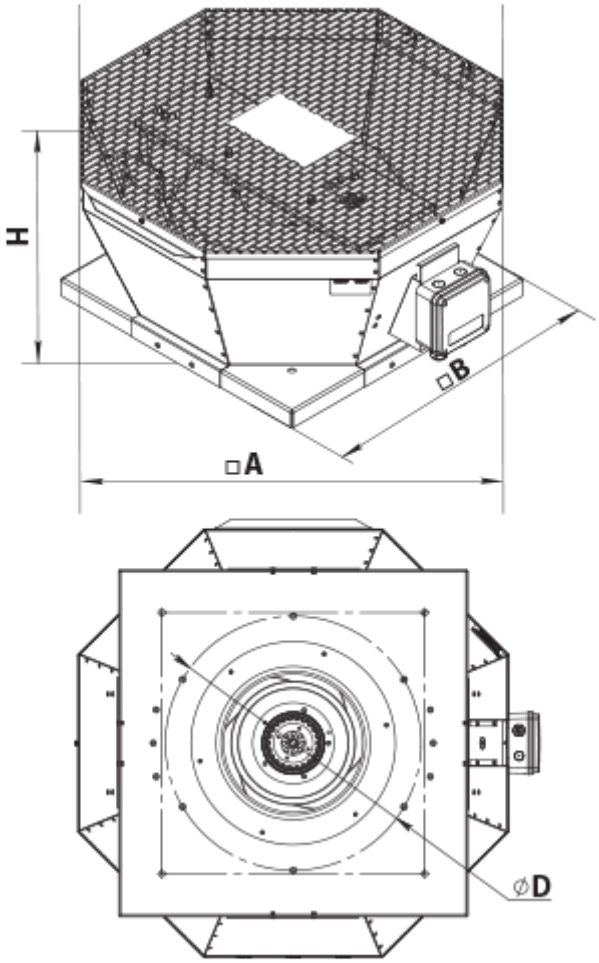

Accessories

Accessories for roof fans

Name	Photo	Description
RKV 355-400		Mounting frame
RKVI 355-400		Mounting frame with thermal-insulating layer
FKV 355-500		Mating flange
GKV 355-500		Flexible connector
KKV 355-500		Backdraft damper