VKV 6E 560

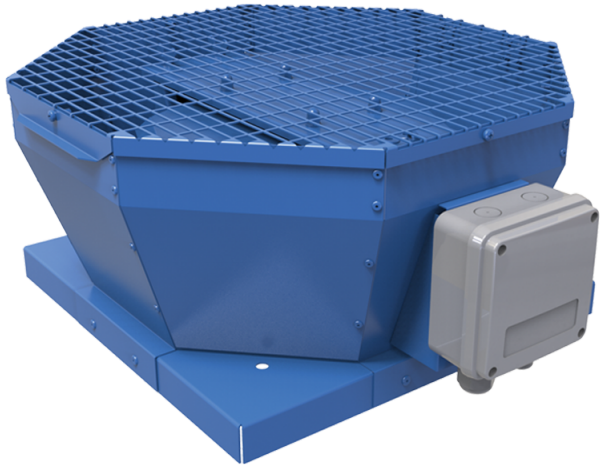

Roof centrifugal fans with vertical air discharge

• Sound pressure level LpA at 3 m: 58
• Impeller type: Centrifugal impeller with backward curved blades
• Casing material: Coated steel

	Unit of measurement	VKV 6E 560
Phases	-	1
Minimum supply voltage	V	230
Maximum supply voltage	V	230
Power supply frequency	Hz	50
Rated power	W	613
Unit current	A	2.7
Maximum airflow	m³/h	9560
Rotation speed at 50hz	-	930
Sound pressure level LpA at 3 m	dB(A)	58
Weight	kg	63
Transported air temperature (max)	°C	50
Transported air temperature (min)	°C	-25
Ingress protection rating	-	IPX4
Ingress protection rating of the drive	-	IP54
Impeller material	-	Aluminium
Size	mm	560

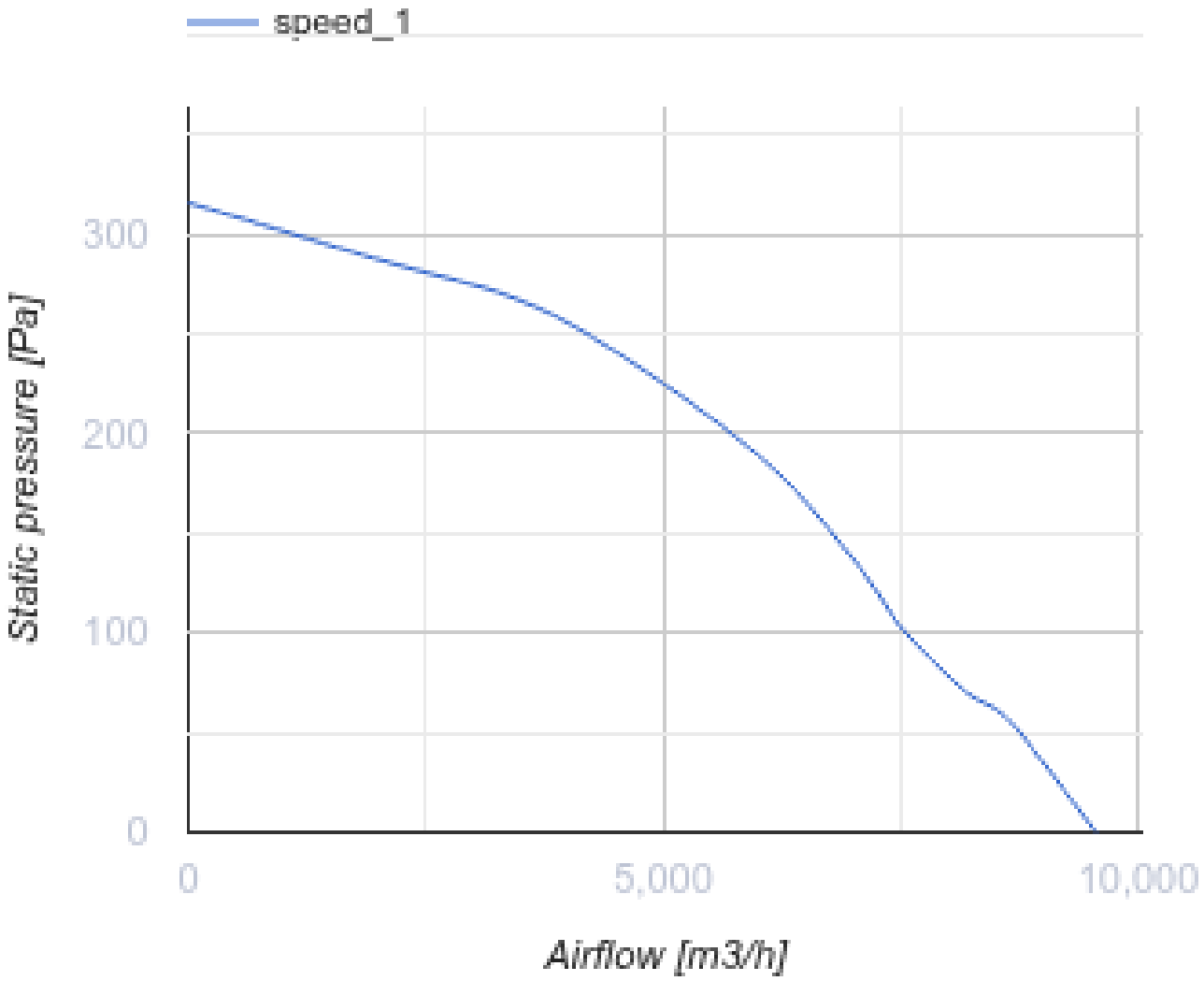
speed_1
300
200
100
0
Static pressure [Pa]
0
5,000
10,000
Airflow [m3/h]

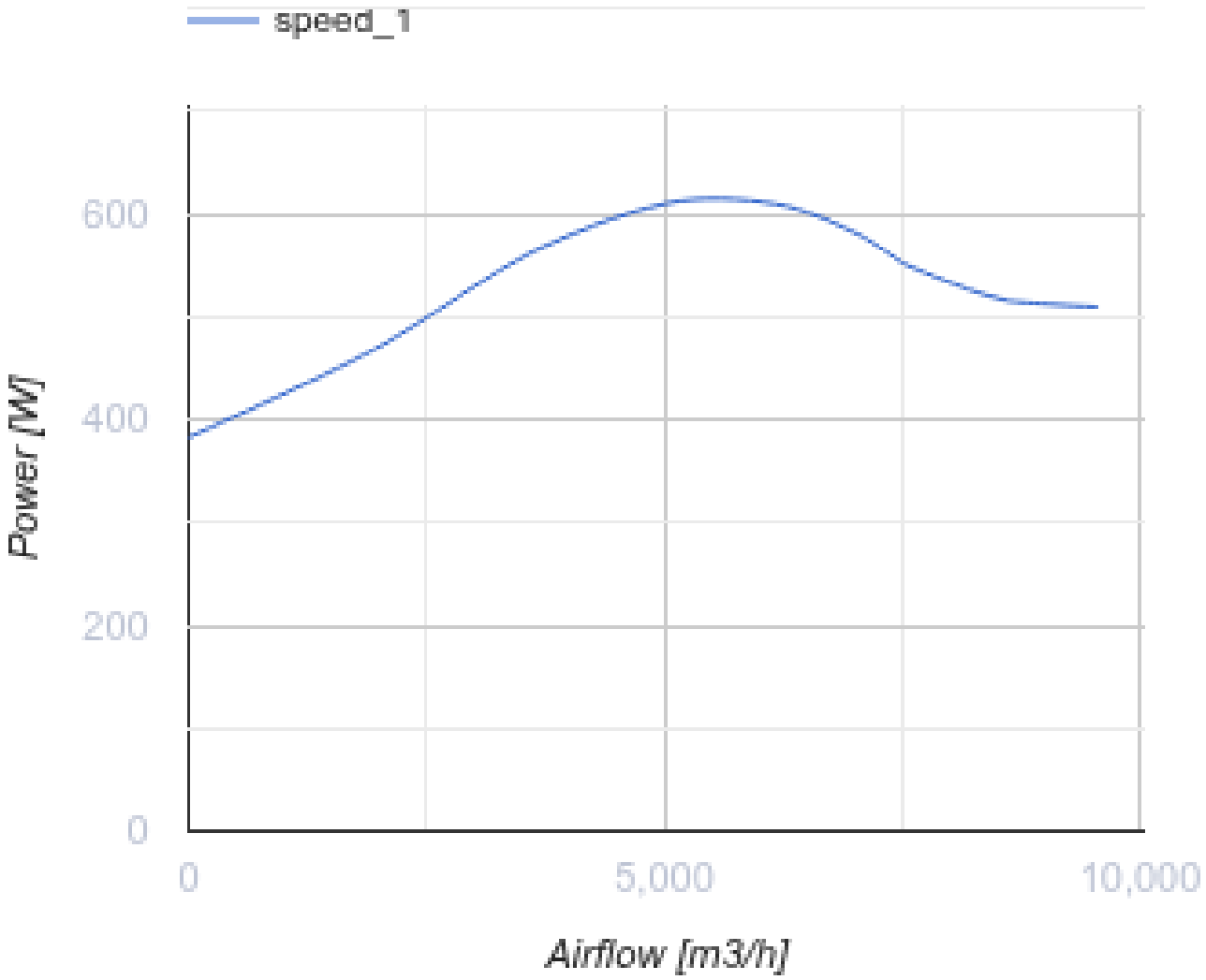

Dimensions

A	B	H	ØD
859	833	485	605

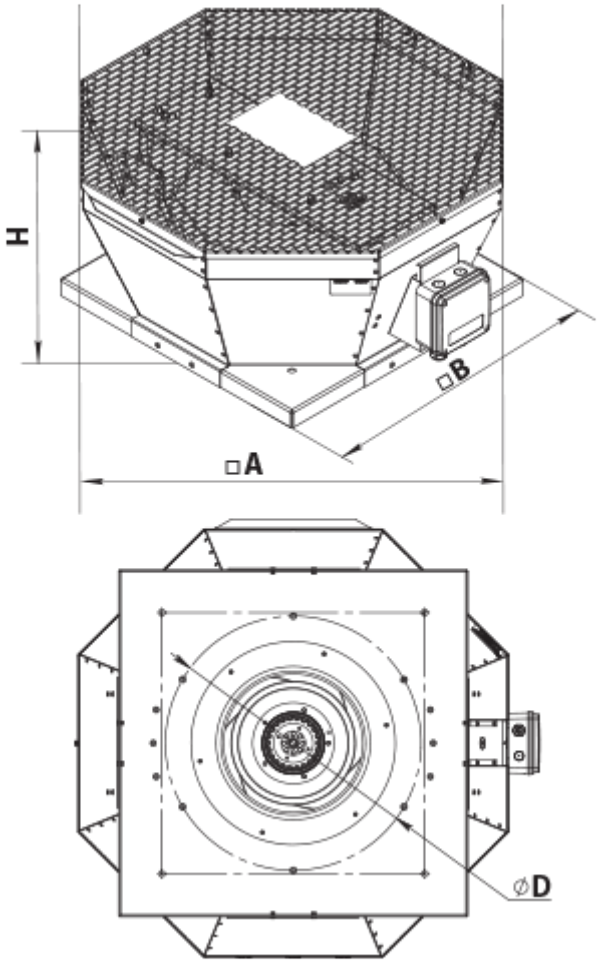

Accessories

Accessories for roof fans

Name	Photo	Description
RKV 560		Mounting frame
RKVI 560		Mounting frame with thermal-insulating layer
FKV 560		Mating flange
GKV 560		Flexible connector
KKV 560		Backdraft damper