# VKVz 190 EC

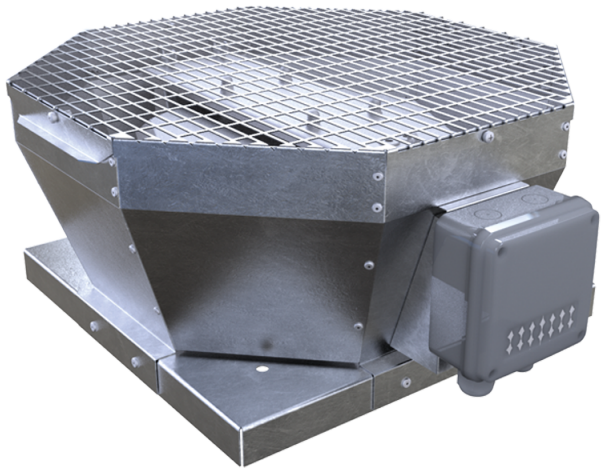

Roof centrifugal fans with vertical air discharge with EC-motors

• Sound pressure level LpA at 3 m: 52
• Impeller type: Centrifugal impeller with backward curved blades
• Casing material: Galvanized steel

| | Unit of measurement | VKVz 190 EC |
|---|---|---|
| Phases | - | 1 |
| Minimum supply voltage | V | 230 |
| Maximum supply voltage | V | 230 |
| Power supply frequency | Hz | 50/60 |
| Rated power | W | 102 |
| Unit current | A | 0.77 |
| Maximum airflow | m³/h | 670 |
| Rotation speed at 50hz | - | 3520 |
| Sound pressure level LpA at 3 m | dB(A) | 52 |
| Weight | kg | 8 |
| Transported air temperature (max) | °C | 60 |
| Transported air temperature (min) | °C | -25 |
| Ingress protection rating | - | IPX4 |
| Ingress protection rating of the drive | - | IP55 |
| Impeller material | - | Galvanized steel |
| Size | mm | 190 |

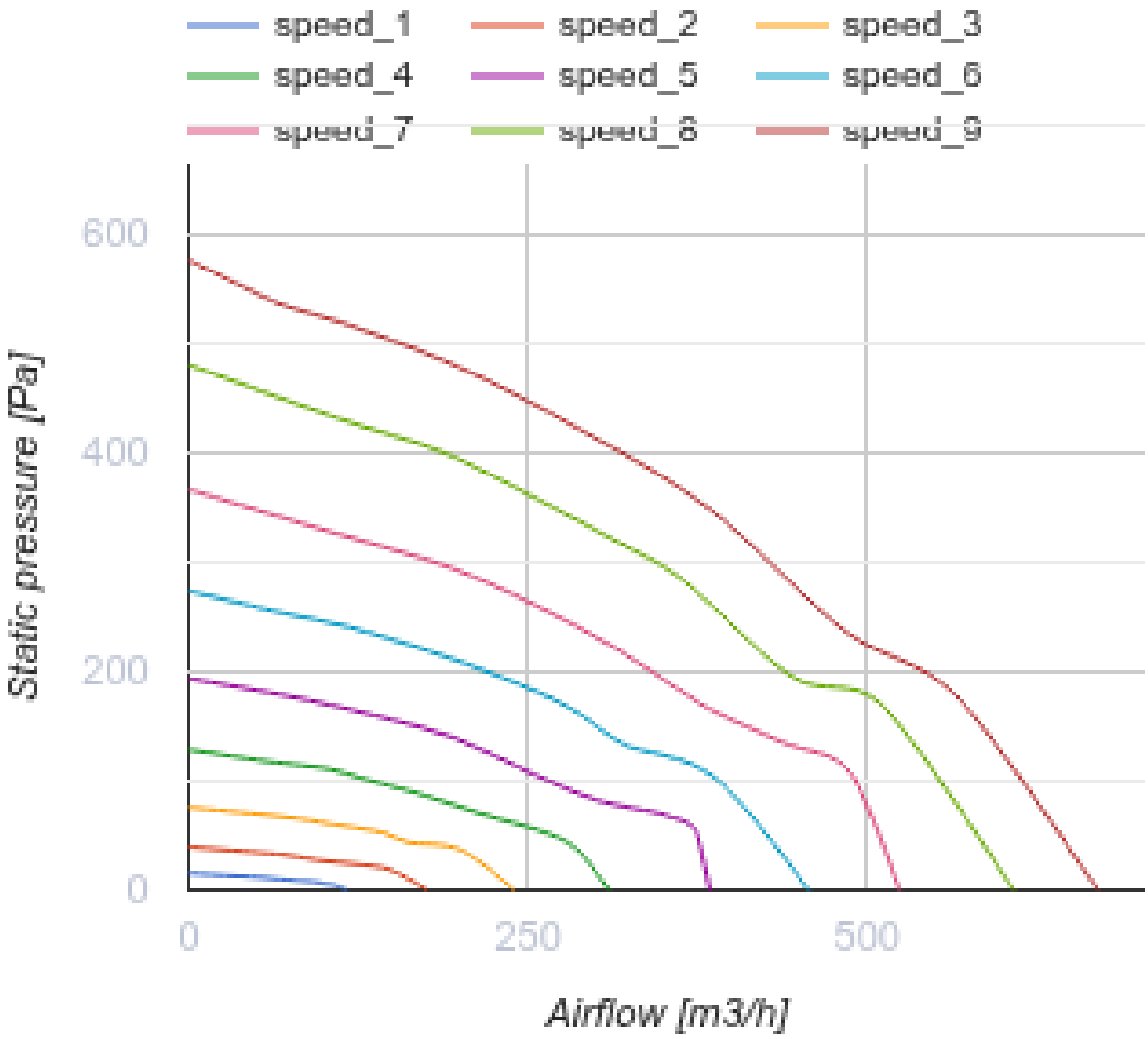
speed_1
speed_2
speed_3
speed_4
speed_5
speed_6
speed_7
speed_8
speed_9
600
400
200
0
Static pressure [Pa]
0
250
500
Airflow [m3/h]

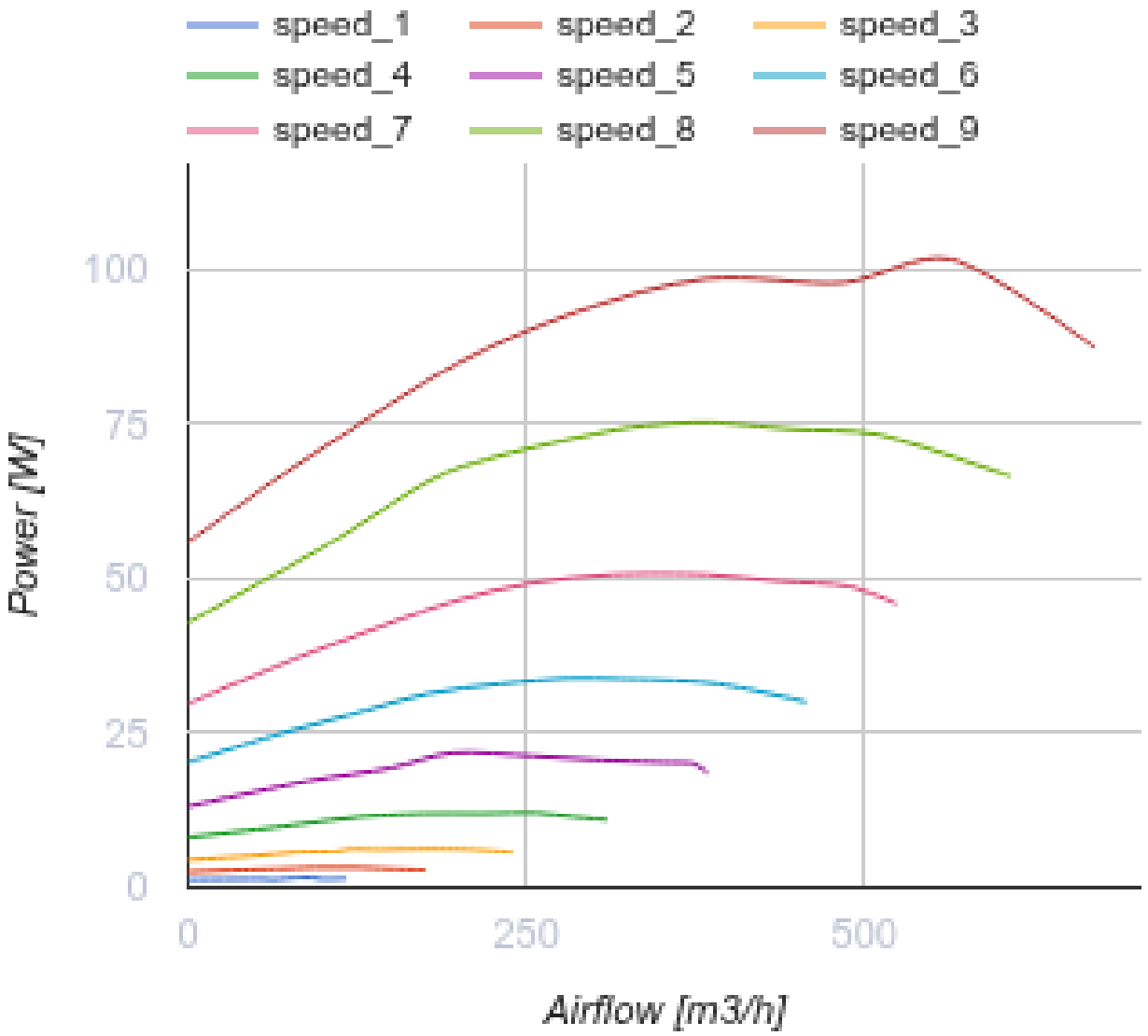


## Dimensions

| A | B | C |
|---|---|---|
| 417 | 354 | 166 |

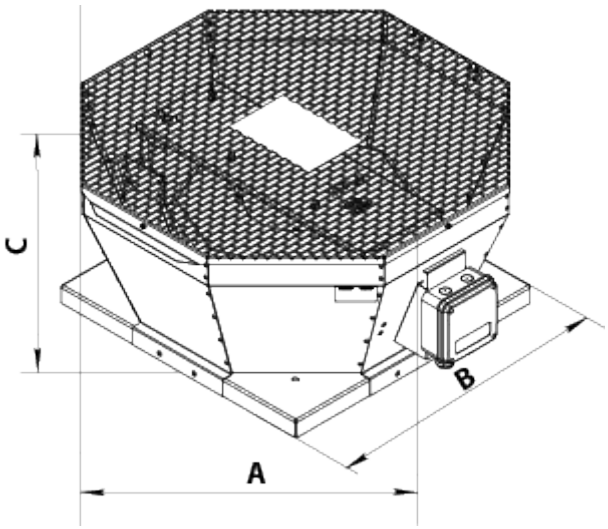


## Accessories

### Speed controllers for EC motors

| Name | Photo | Description |
|---|---|---|
| R-1/010 |  | Speed controller for EC motors |

### Accessories for roof fans

| Name | Photo | Description |
|---|---|---|
| RKV 220-225 |  | Mounting frame |
| RKVI 220-225 |  | Mounting frame with thermal-insulating layer |
| FKV 220-225 |  | Mating flange |
| GKV 220-225 |  | Flexible connector |
| KKV 220-225 |  | Backdraft damper |

## Ecodesign

| Trademark | Vents | | | | | |
|---|---|---|---|---|---|---|
| Model | VKVz 190 EC | | | | | |
| Specific energy consumption (SEC) (kWh/(m²/a)) | Cold | | Average | | Warm | |
| | -53.3 | A+ | -26.2 | B | -10.7 | E |
| Type of ventilation unit | Unidirectional | | | | | |
| Type of drive installed | Multi-speed | | | | | |
| Type of heat recovery system | None | | | | | |
| Maximum flow rate (m³/h) | 88 | | | | | |
| Electric power input (W) | 14 | | | | | |
| Reference flow rate (m³/s) | 0.017 | | | | | |
| Specific power input (SPI) (W/(m³/h)) | 0.102 | | | | | |
| Control typology | Local demand control | | | | | |
| Maximum external leakage rates (%) | 2.7 | | | | | |
| Declared typology | RVU UVU | | | | | |
| Sound power level (dB(A)) | 53 | | | | | |
| The annual electricity consumption (AEC) (kWh/a) | Cold | | Average | | Warm | |
| | 83 | | 83 | | 83 | |
| The annual heating saved (AHS) (kWh/a) | Cold | | Average | | Warm | |
| | 5536 | | 2830 | | 1280 | |