VKVz 250 EC

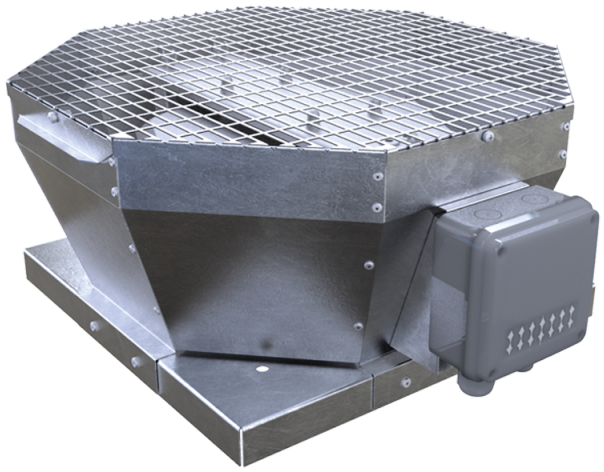

Roof centrifugal fans with vertical air discharge with EC-motors

• Sound pressure level LpA at 3 m: 54
• Impeller type: Centrifugal impeller with backward curved blades
• Casing material: Galvanized steel

	Unit of measurement	VKVz 250 EC
Phases	-	1
Minimum supply voltage	V	230
Maximum supply voltage	V	230
Power supply frequency	Hz	50/60
Rated power	W	161
Unit current	A	1.29
Maximum airflow	m³/h	1470
Rotation speed at 50hz	-	3300
Sound pressure level LpA at 3 m	dB(A)	54
Weight	kg	13
Transported air temperature (max)	°C	60
Transported air temperature (min)	°C	-25
Ingress protection rating	-	IPX4
Ingress protection rating of the drive	-	IP55
Impeller material	-	Galvanized steel
Size	mm	250

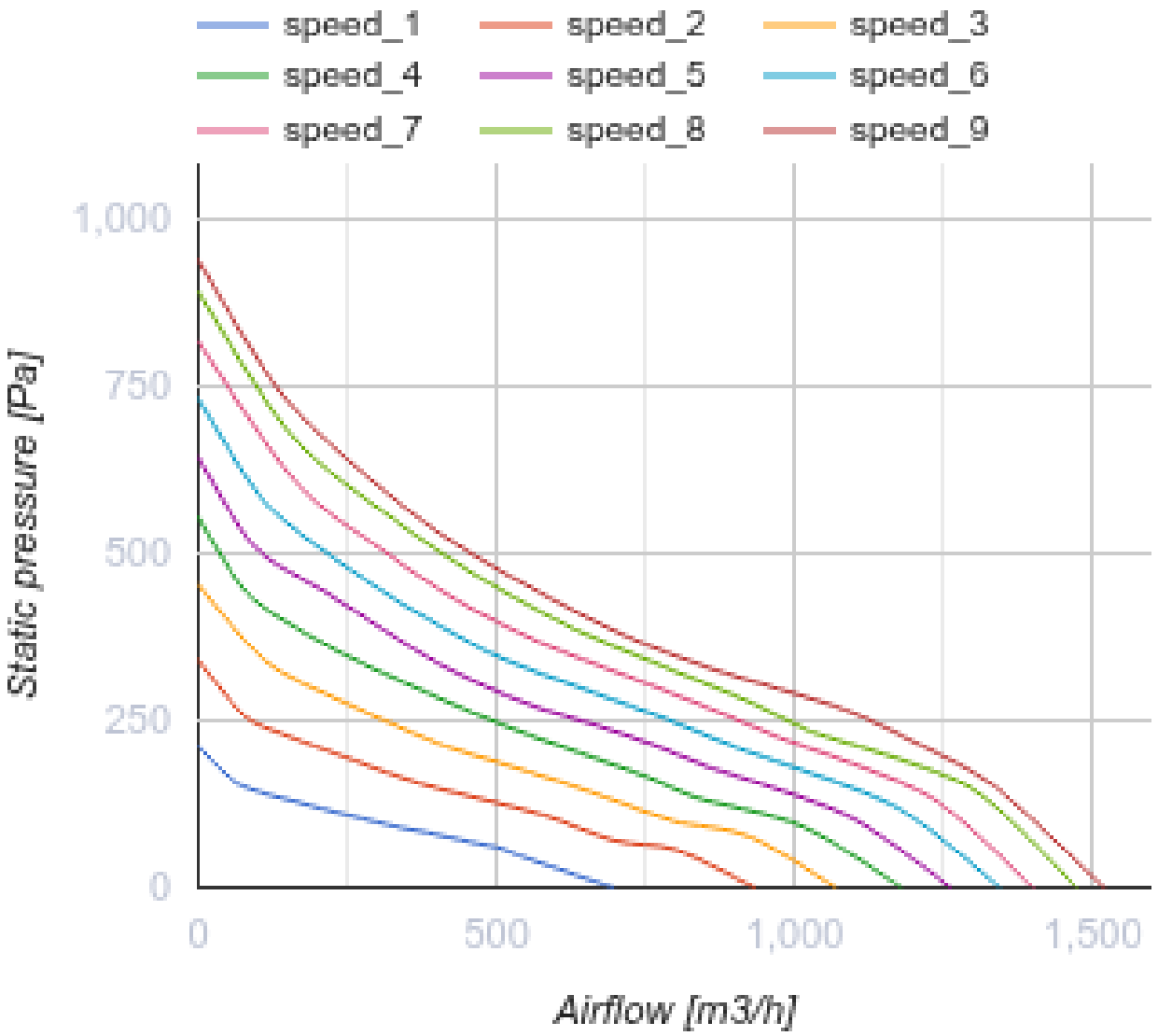
speed_1
speed_2
speed_3
speed_4
speed_5
speed_6
speed_7
speed_8
speed_9
1,000
750
500
250
0
Static pressure [Pa]
0
500
1,000
1,500
Airflow [m3/h]

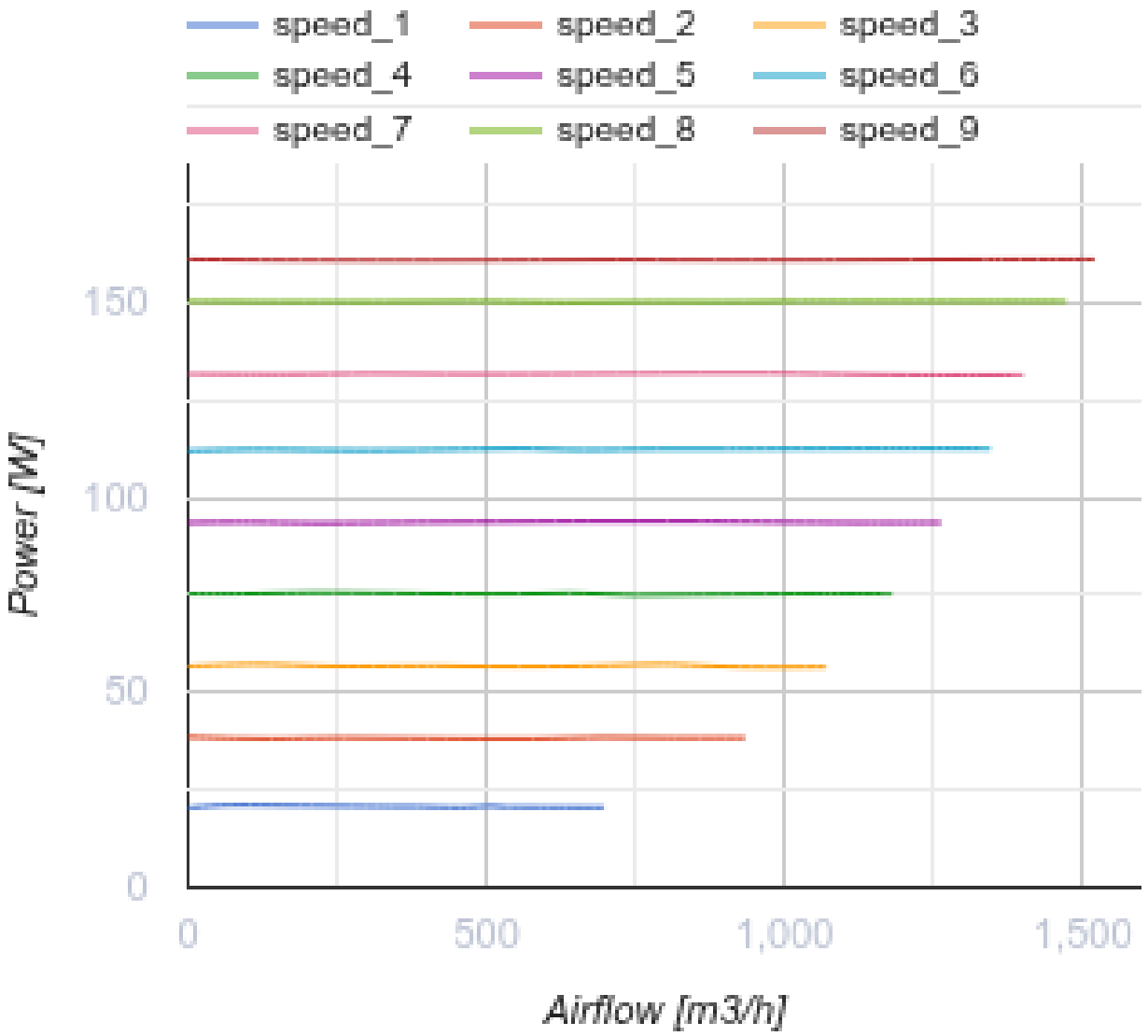

Dimensions

A	B	C
481	425	236

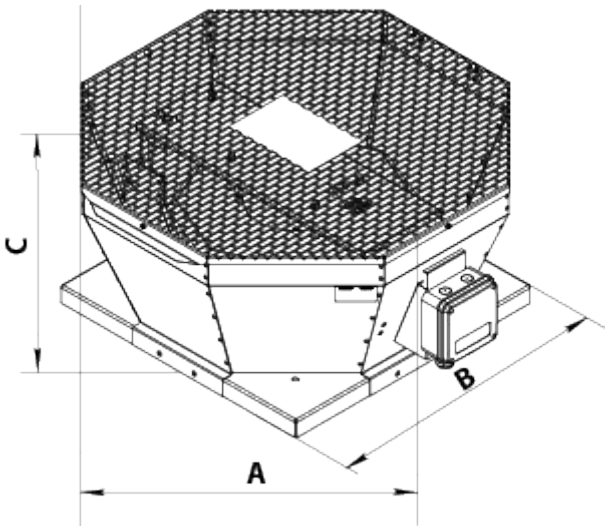

Accessories

Speed controllers for EC motors

Name	Photo	Description
R-1/010		Speed controller for EC motors

Accessories for roof fans

Name	Photo	Description
RKV 250-315		Mounting frame
RKVI 250-315		Mounting frame with thermal-insulating layer
FKV 250-315		Mating flange
GKV 250-315		Flexible connector
KKV 250-315		Backdraft damper

Ecodesign

Trademark	Vents
Model	VKVz 250 EC
Type of drive installed	Integrated VSD
Type of heat recovery system	None
Nominal external pressure (Pa)	267
Maximum external leakage rates (%)	2.7
Static efficiency (%)	58.3
Declared typology	NRVU UVU
Effective electric power input (kW)	0.161
Sound power level (dB(A))	74