# VKVz 280 EC

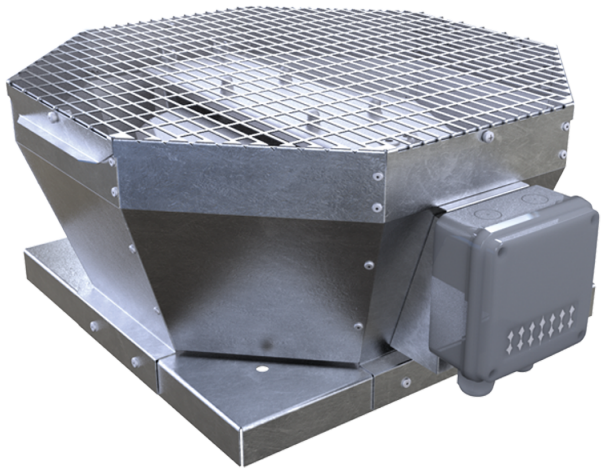

Roof centrifugal fans with vertical air discharge with EC-motors

• Sound pressure level LpA at 3 m: 48
• Impeller type: Centrifugal impeller with backward curved blades
• Casing material: Galvanized steel

| | Unit of measurement | VKVz 280 EC |
|---|---|---|
| Phases | - | 1 |
| Minimum supply voltage | V | 230 |
| Maximum supply voltage | V | 230 |
| Power supply frequency | Hz | 50/60 |
| Rated power | W | 182 |
| Unit current | A | 1.34 |
| Maximum airflow | m³/h | 2330 |
| Rotation speed at 50hz | - | 2610 |
| Sound pressure level LpA at 3 m | dB(A) | 48 |
| Weight | kg | 13 |
| Transported air temperature (max) | °C | 60 |
| Transported air temperature (min) | °C | -20 |
| Ingress protection rating | - | IPX4 |
| Ingress protection rating of the drive | - | IP44 |
| Impeller material | - | Galvanized steel |
| Size | mm | 280 |

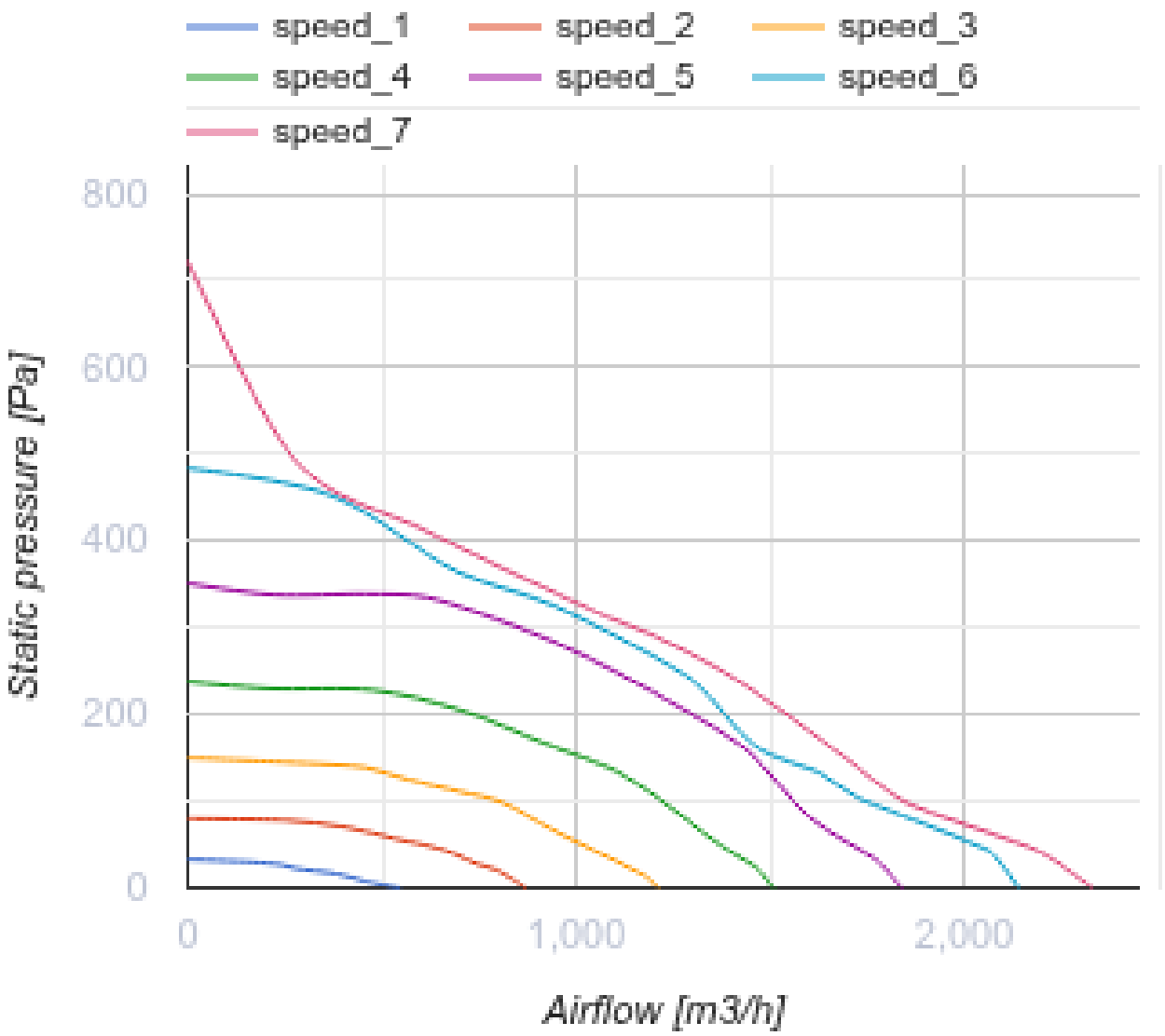
speed_1
speed_2
speed_3
speed_4
speed_5
speed_6
speed_7
800
600
400
200
0
Static pressure [Pa]
0
1,000
2,000
Airflow [m3/h]

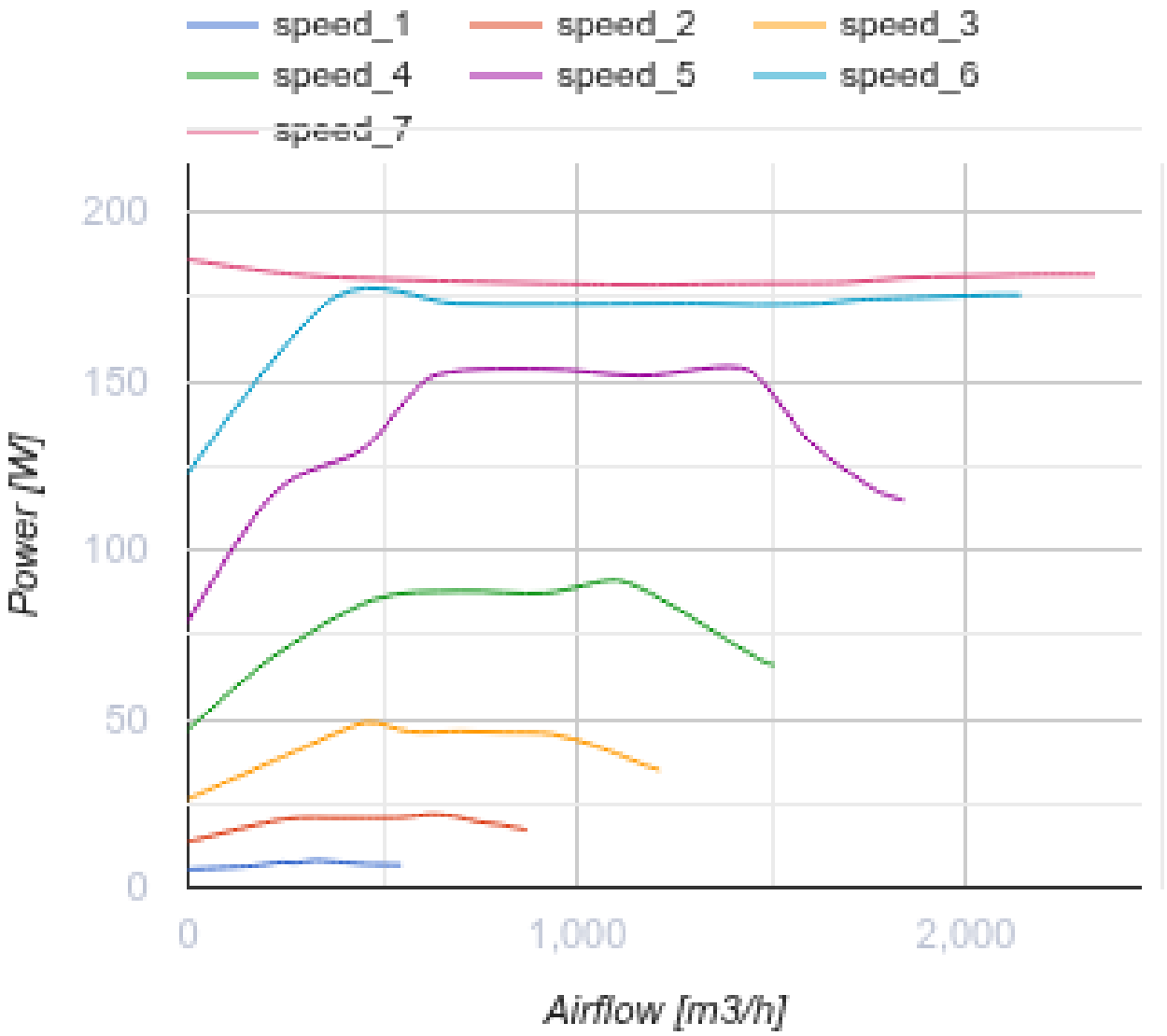


## Dimensions

| A | B | C |
|---|---|---|
| 547 | 425 | 274 |

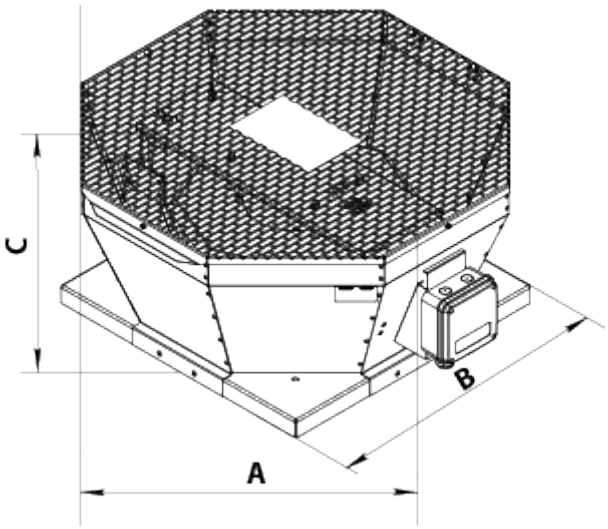


## Accessories

### Speed controllers for EC motors

| Name | Photo | Description |
|---|---|---|
| R-1/010 |  | Speed controller for EC motors |

### Accessories for roof fans

| Name | Photo | Description |
|---|---|---|
| RKV 250-315 |  | Mounting frame |
| RKVI 250-315 |  | Mounting frame with thermal-insulating layer |
| FKV 250-315 |  | Mating flange |
| GKV 250-315 |  | Flexible connector |
| KKV 250-315 |  | Backdraft damper |

## Ecodesign

| Trademark | Vents |
|---|---|
| Model | VKVz 280 EC |
| Type of drive installed | Integrated VSD |
| Type of heat recovery system | None |
| Nominal external pressure (Pa) | 293 |
| Maximum external leakage rates (%) | 2.7 |
| Static efficiency (%) | 63.1 |
| Declared typology | NRVU UVU |
| Effective electric power input (kW) | 0.179 |
| Sound power level (dB(A)) | 68 |