VKVz 2E 250

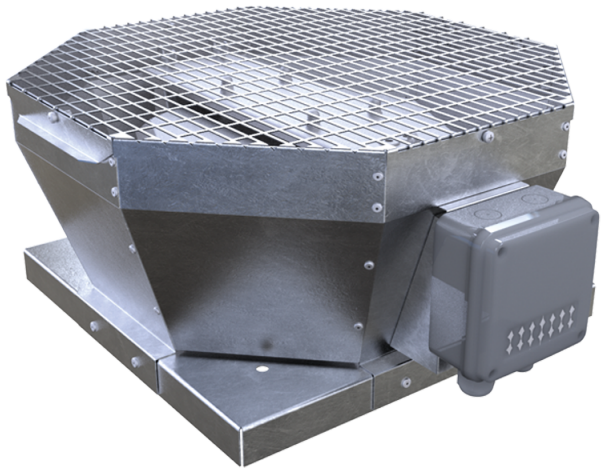

Roof centrifugal fans with vertical air discharge

• Sound pressure level LpA at 3 m: 54
• Impeller type: Centrifugal impeller with backward curved blades
• Casing material: Galvanized steel

	Unit of measurement	VKVz 2E 250
Phases	-	1
Minimum supply voltage	V	230
Maximum supply voltage	V	230
Power supply frequency	Hz	50/60
Rated power	W	184
Unit current	A	0.81
Maximum airflow	m³/h	1450
Rotation speed at 50hz	-	2480
Sound pressure level LpA at 3 m	dB(A)	54
Weight	kg	9
Transported air temperature (max)	°C	50
Transported air temperature (min)	°C	-25
Ingress protection rating	-	IPX4
Ingress protection rating of the drive	-	IP44
Impeller material	-	Plastic
Size	mm	250

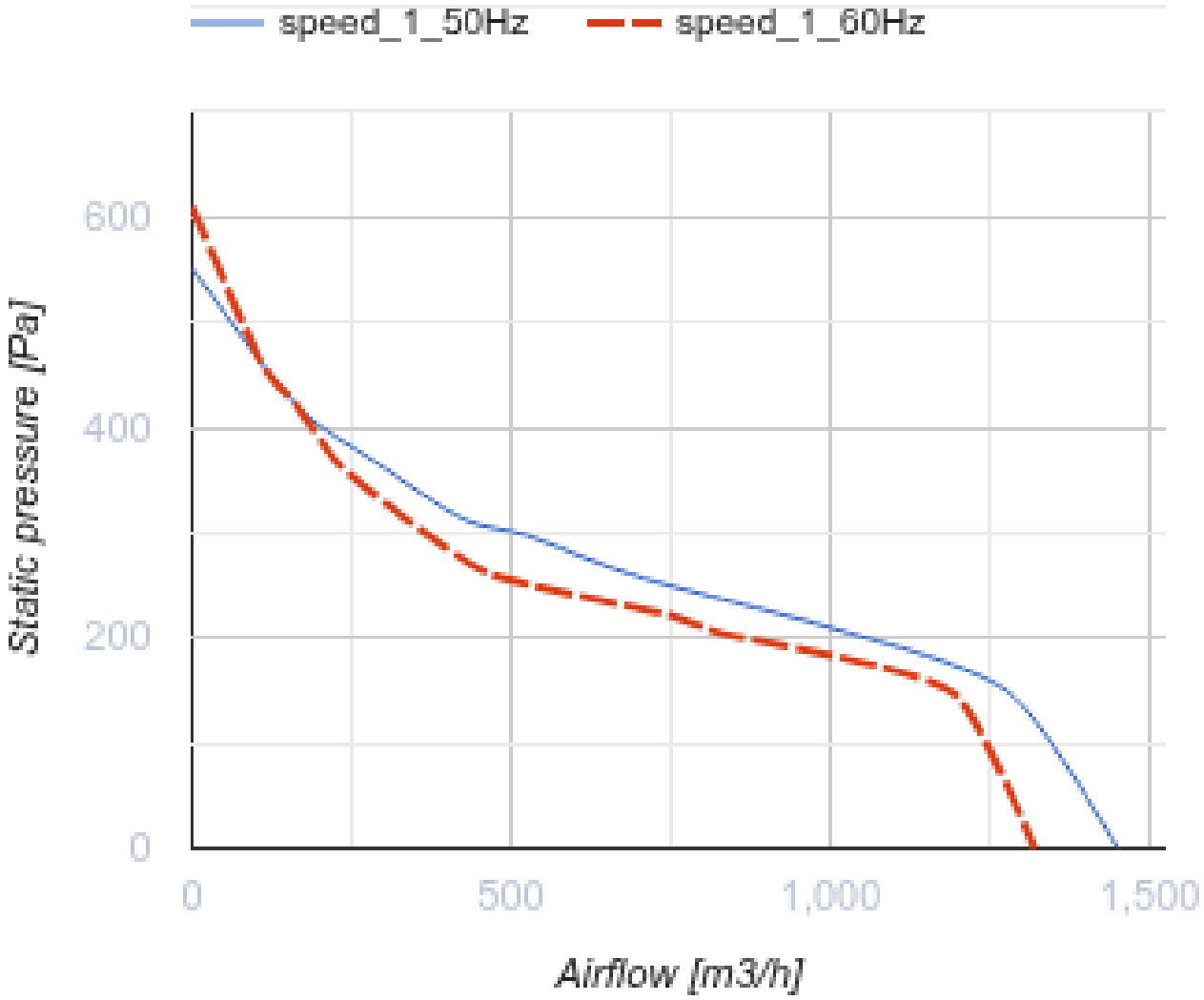
speed_1_50Hz
speed_1_60Hz
600
400
200
0
Static pressure [Pa]
0
500
1,000
1,500
Airflow [m3/h]

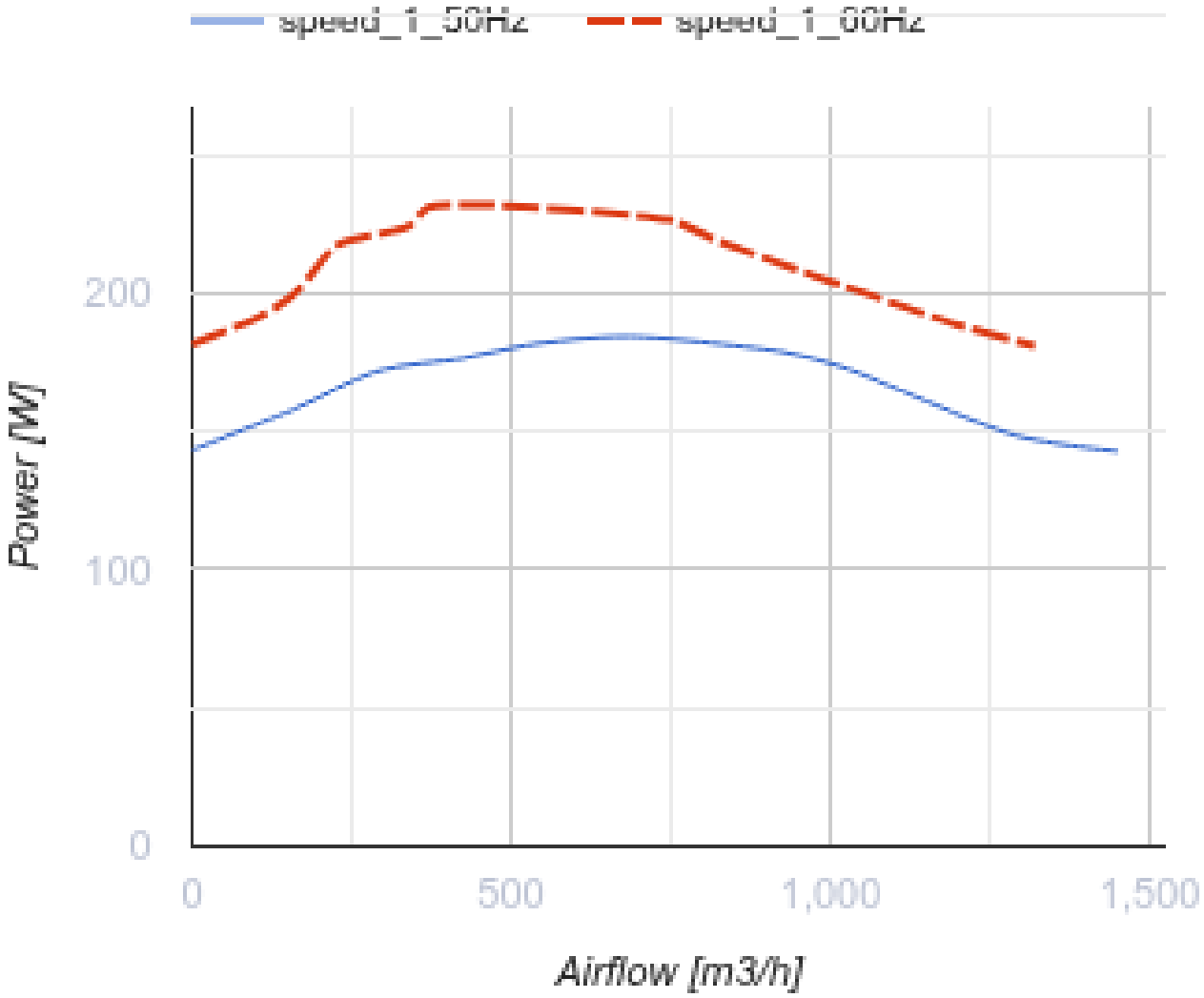

Dimensions

A	B	H	ØD
481	425	240	285

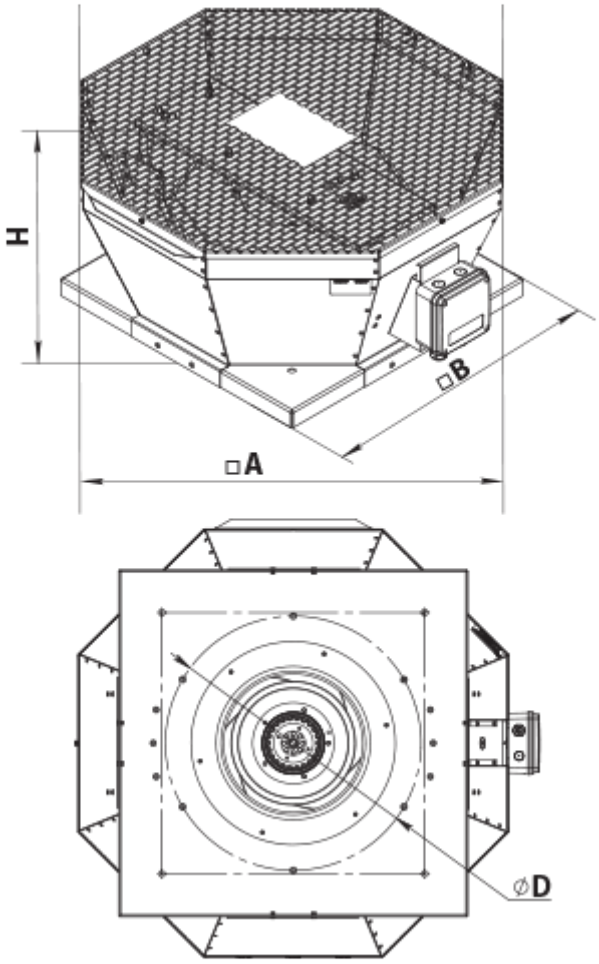

Accessories

Accessories for roof fans

Name	Photo	Description
RKV 250-315		Mounting frame
RKVI 250-315		Mounting frame with thermal-insulating layer
FKV 250-315		Mating flange
GKV 250-315		Flexible connector
KKV 250-315		Backdraft damper

Ecodesign

Trademark	Vents
Model	VKVz 2E 250
Type of drive installed	External MSD or VSD
Type of heat recovery system	None
Nominal external pressure (Pa)	144
Maximum external leakage rates (%)	2.7
Static efficiency (%)	35.4
Declared typology	NRVU UVU
Effective electric power input (kW)	0.149
Sound power level (dB(A))	74