VKVz 2E 310

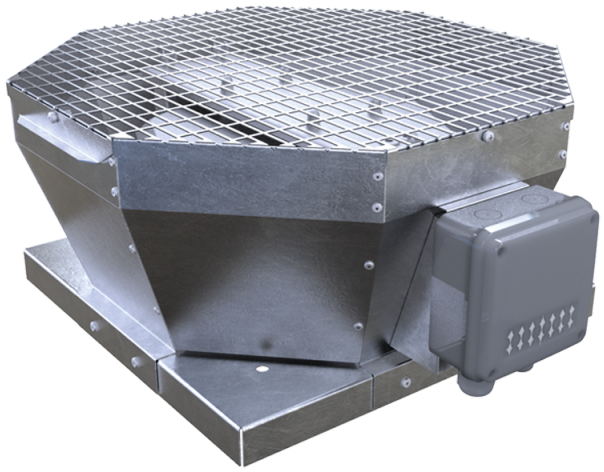

Roof centrifugal fans with vertical air discharge

• Sound pressure level LpA at 3 m: 58
• Impeller type: Centrifugal impeller with backward curved blades
• Casing material: Galvanized steel

	Unit of measurement	VKVz 2E 310
Phases	-	1
Minimum supply voltage	V	230
Maximum supply voltage	V	230
Power supply frequency	Hz	50
Rated power	W	324
Unit current	A	1.42
Maximum airflow	m³/h	2150
Rotation speed at 50hz	-	2620
Sound pressure level LpA at 3 m	dB(A)	58
Weight	kg	13
Transported air temperature (max)	°C	50
Transported air temperature (min)	°C	-25
Ingress protection rating	-	IPX4
Ingress protection rating of the drive	-	IP44
Impeller material	-	Aluminium
Size	mm	310

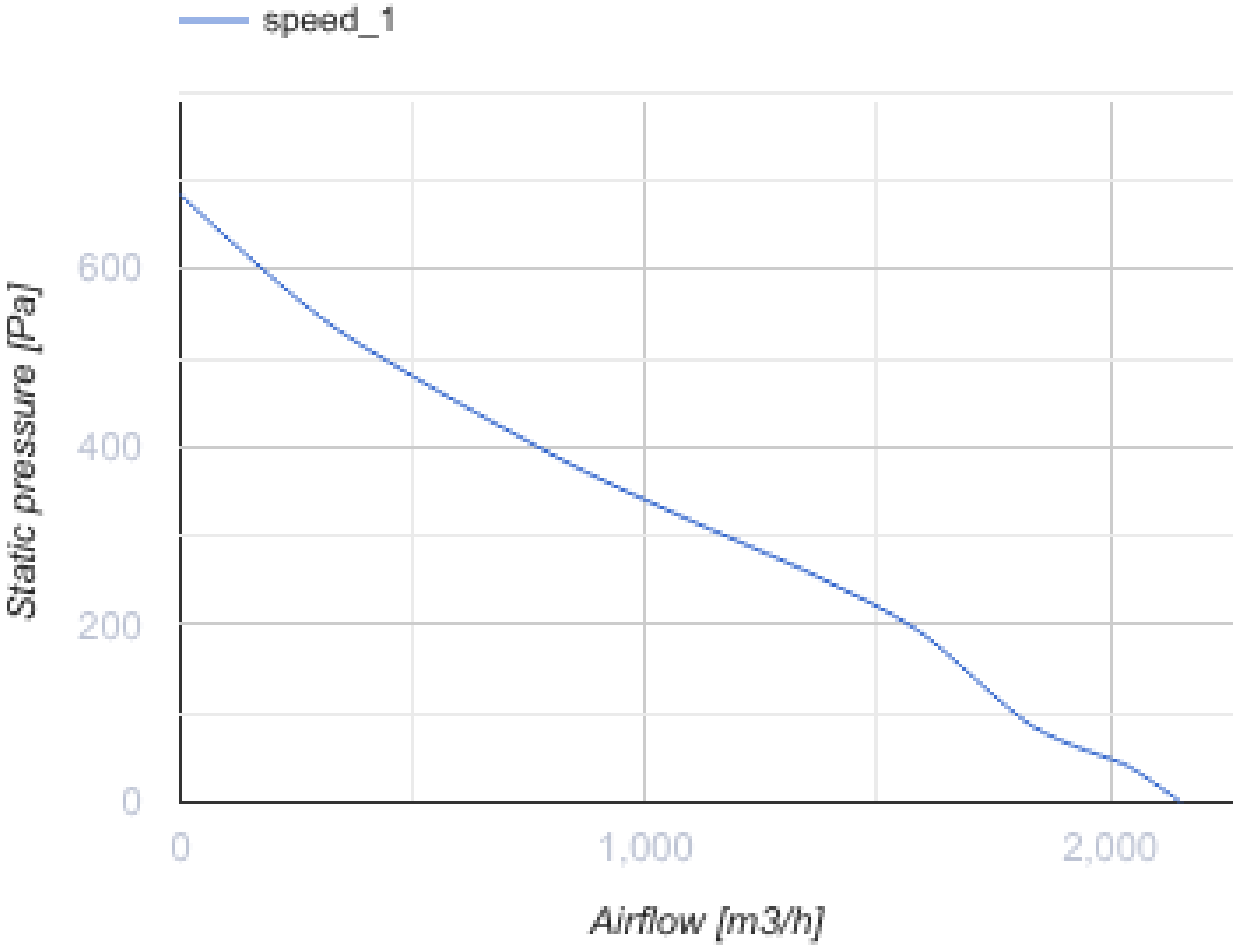
speed_1
Static pressure [Pa]
600
400
200
0
0
1,000
2,000
Airflow [m3/h]

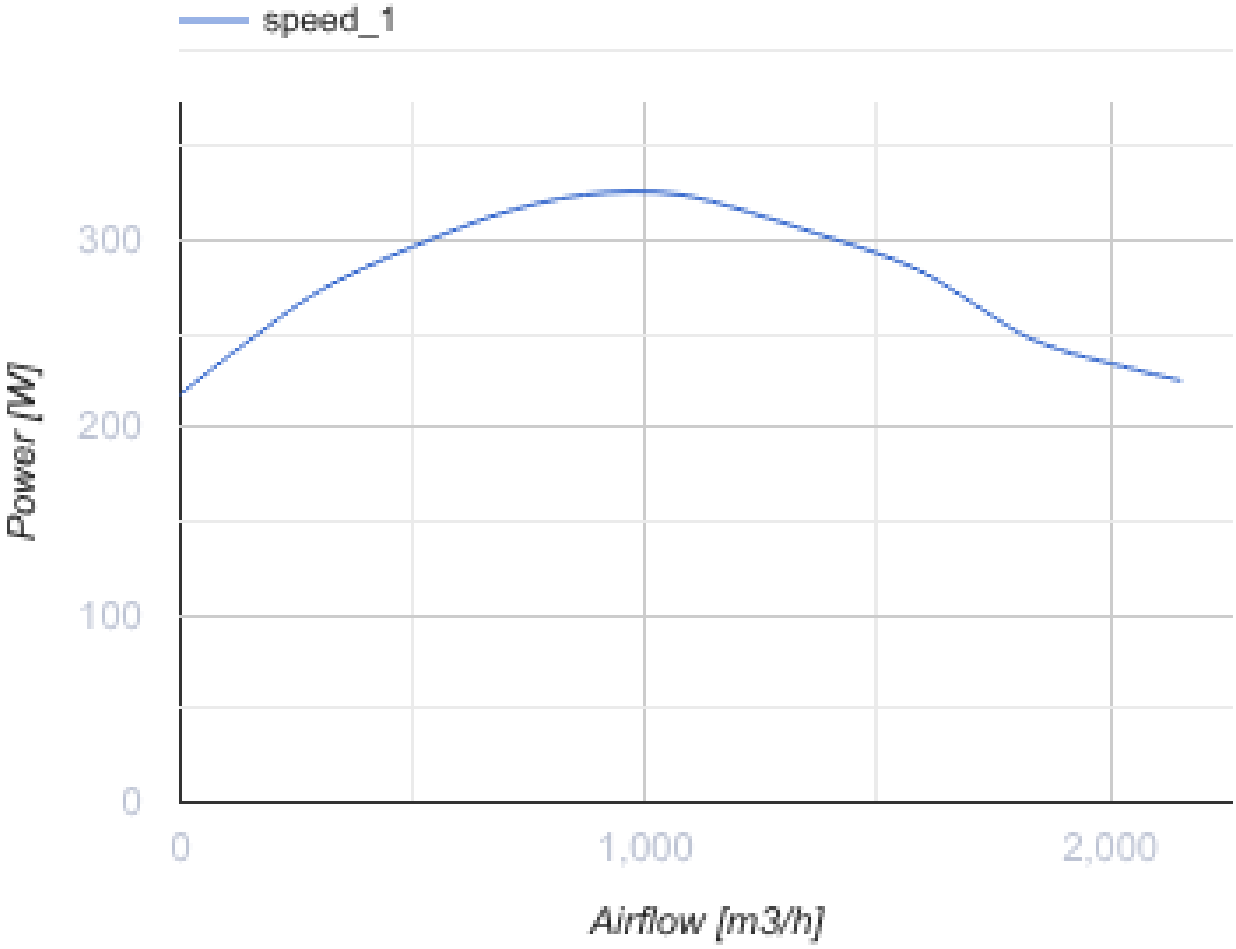

Dimensions

A	B	H	ØD
547	425	276	285

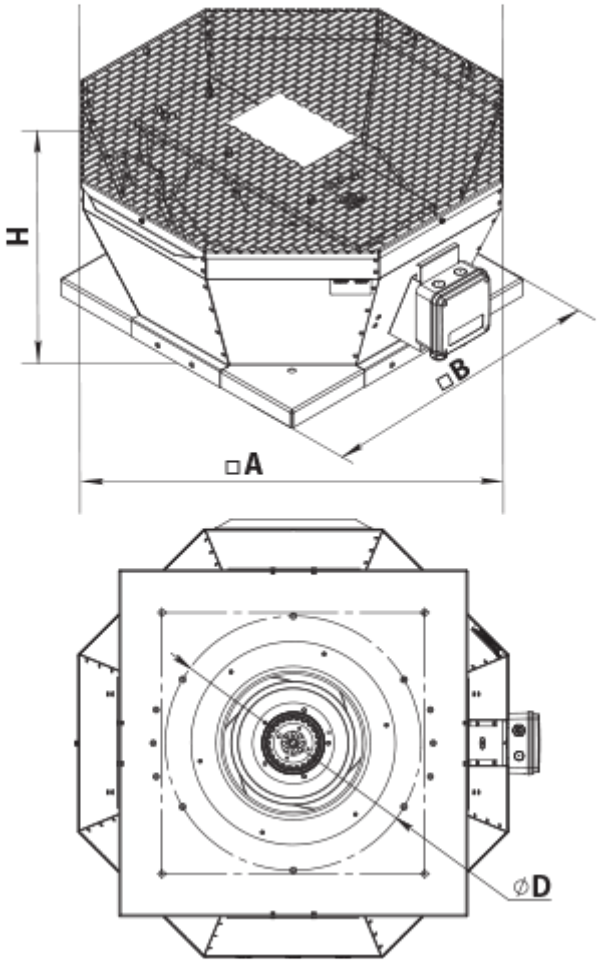

Accessories

Accessories for roof fans

Name	Photo	Description
RKV 250-315		Mounting frame
RKVI 250-315		Mounting frame with thermal-insulating layer
FKV 250-315		Mating flange
GKV 250-315		Flexible connector
KKV 250-315		Backdraft damper

Ecodesign

Trademark	Vents
Model	VKVz 2E 310
Type of drive installed	External MSD or VSD
Type of heat recovery system	None
Nominal external pressure (Pa)	254
Maximum external leakage rates (%)	2.7
Static efficiency (%)	32.6
Effective electric power input (kW)	0.303
Sound power level (dB(A))	78
Declared typology	NRVU UVU