VKVz 400 EC

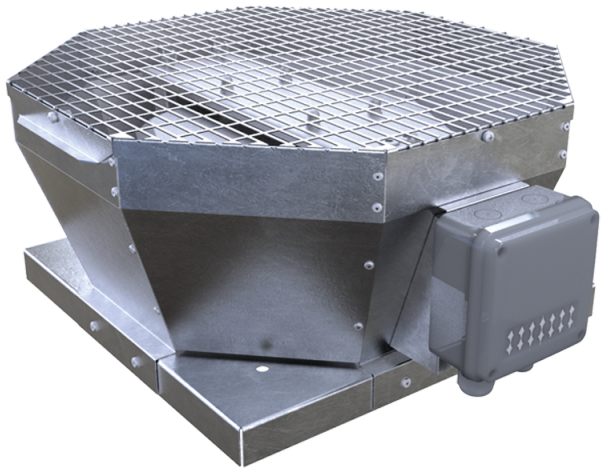

Roof centrifugal fans with vertical air discharge with EC-motors

• Sound pressure level LpA at 3 m: 58
• Impeller type: Centrifugal impeller with backward curved blades
• Casing material: Galvanized steel

	Unit of measurement	VKVz 400 EC
Phases	-	1
Minimum supply voltage	V	230
Maximum supply voltage	V	230
Power supply frequency	Hz	50/60
Rated power	W	526
Unit current	A	3.9
Maximum airflow	m³/h	5380
Rotation speed at 50hz	-	1450
Sound pressure level LpA at 3 m	dB(A)	58
Weight	kg	27
Transported air temperature (max)	°C	50
Transported air temperature (min)	°C	-25
Ingress protection rating	-	IPX4
Ingress protection rating of the drive	-	IP54
Impeller material	-	Aluminium
Size	mm	400

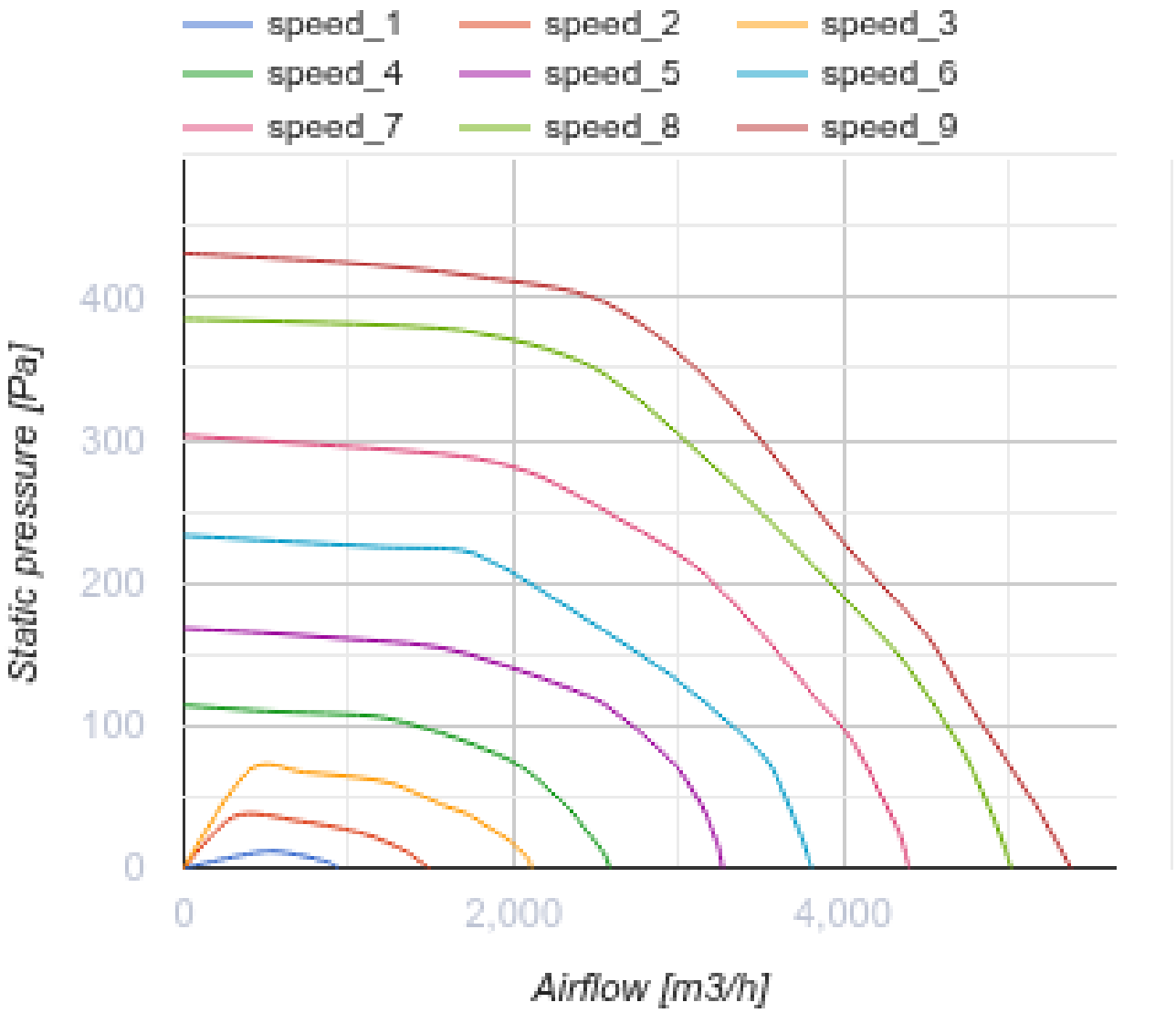
speed_1
speed_2
speed_3
speed_4
speed_5
speed_6
speed_7
speed_8
speed_9
Static pressure [Pa]
400
300
200
100
0
0
2,000
4,000
Airflow [m3/h]

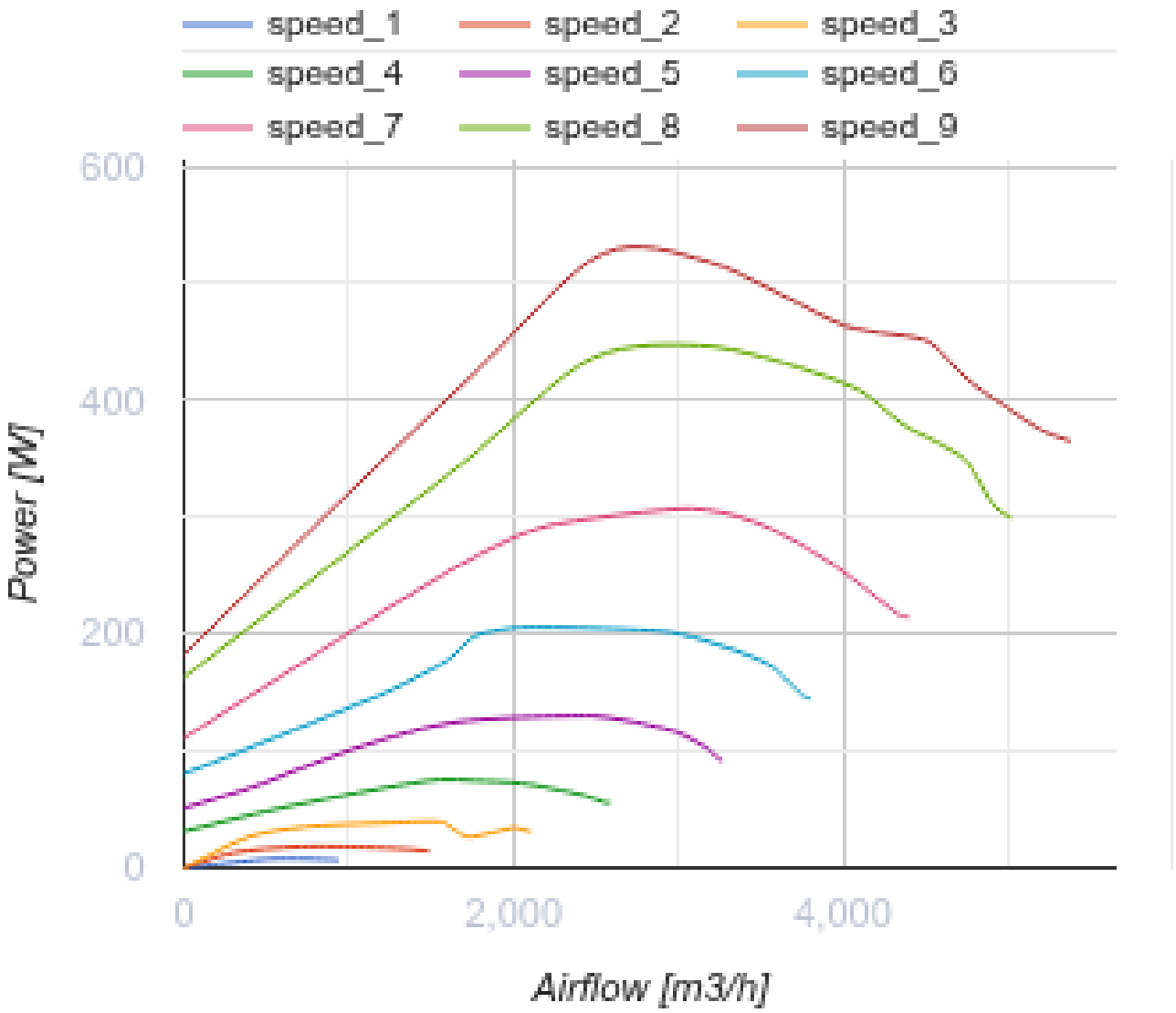

Dimensions

A	B	C
738	598	371

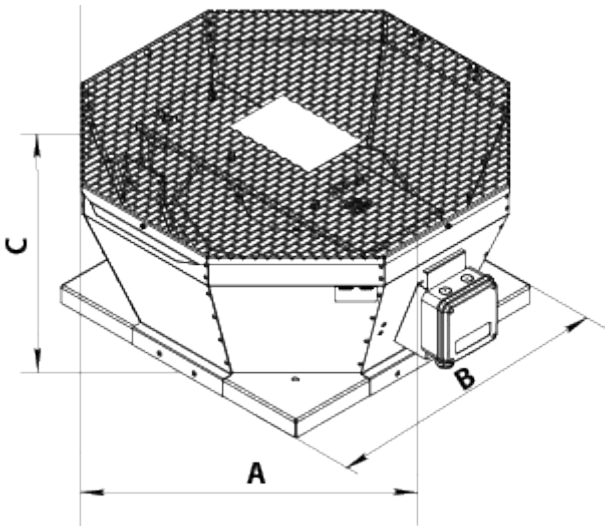

Accessories

Speed controllers for EC motors

Name	Photo	Description
R-1/010		Speed controller for EC motors

Accessories for roof fans

Name	Photo	Description
RKV 355-400		Mounting frame
RKVI 355-400		Mounting frame with thermal-insulating layer
FKV 355-500		Mating flange
GKV 355-500		Flexible connector
KKV 355-500		Backdraft damper

Ecodesign

Trademark	Vents
Model	VKVz 400 EC
Type of drive installed	Integrated VSD
Type of heat recovery system	None
Nominal external pressure (Pa)	341
Maximum external leakage rates (%)	2.7
Static efficiency (%)	65.8
Declared typology	NRVU UVU
Effective electric power input (kW)	0.519
Sound power level (dB(A))	78