VKVz 450 EC

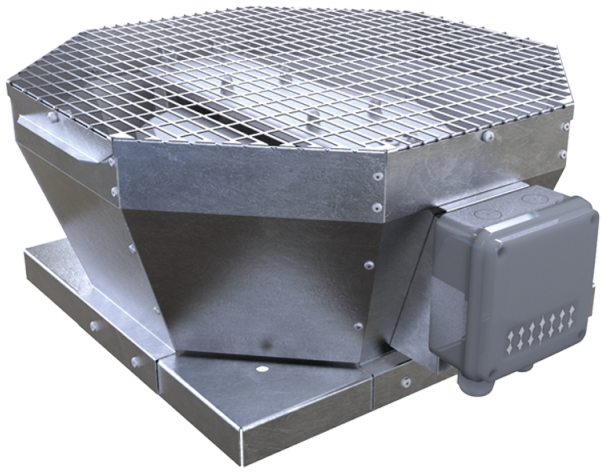

Roof centrifugal fans with vertical air discharge with EC-motors

• Sound pressure level LpA at 3 m: 63
• Impeller type: Centrifugal impeller with backward curved blades
• Casing material: Galvanized steel

	Unit of measurement	VKVz 450 EC
Phases	-	3
Minimum supply voltage	V	400
Maximum supply voltage	V	400
Power supply frequency	Hz	50/60
Rated power	W	1323
Unit current	A	3.27
Maximum airflow	m³/h	8110
Rotation speed at 50hz	-	1560
Sound pressure level LpA at 3 m	dB(A)	63
Weight	kg	46
Transported air temperature (max)	°C	60
Transported air temperature (min)	°C	-20
Ingress protection rating	-	IPX4
Ingress protection rating of the drive	-	IP54
Impeller material	-	Aluminium
Size	mm	450

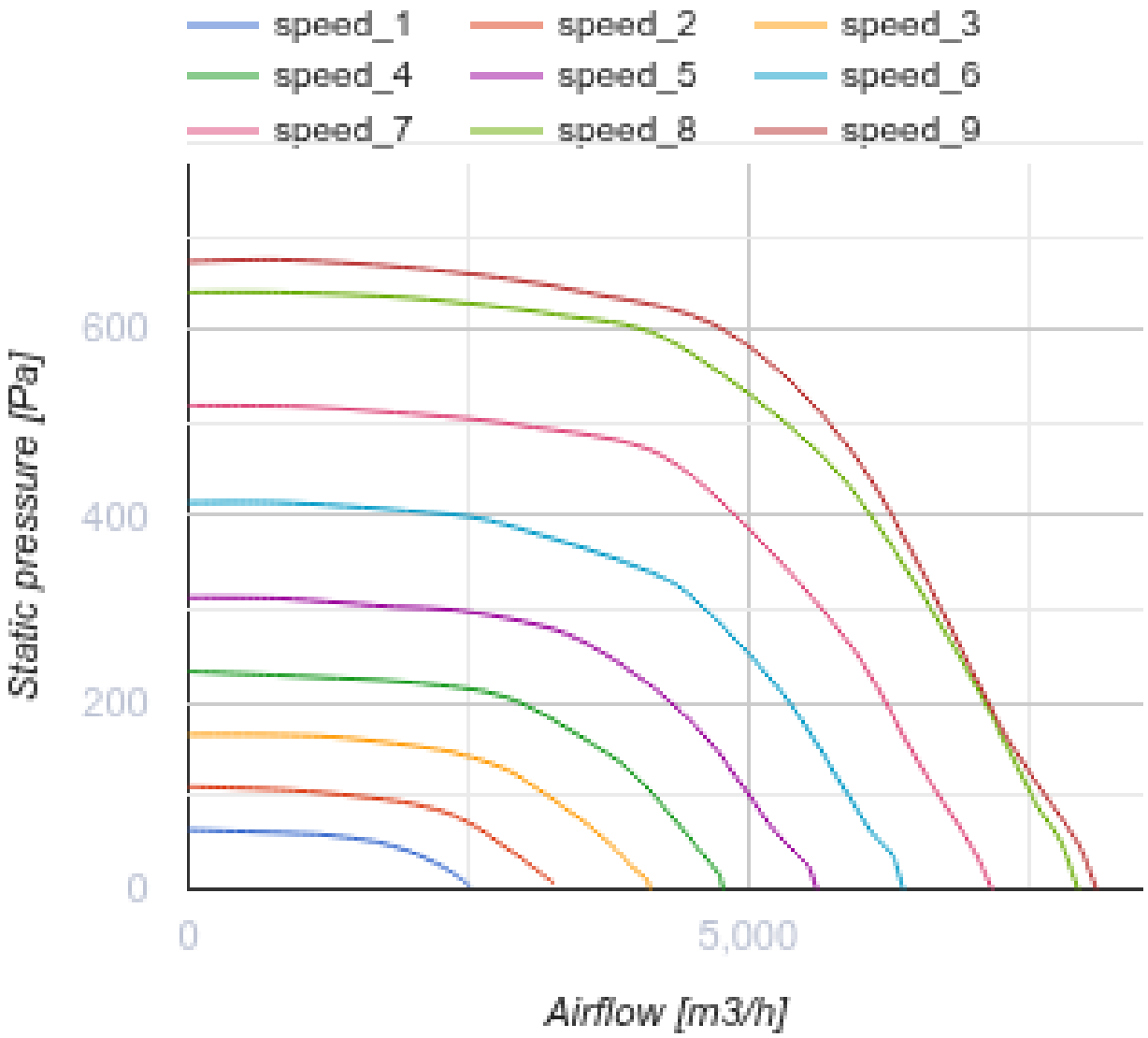
speed_1
speed_2
speed_3
speed_4
speed_5
speed_6
speed_7
speed_8
speed_9
600
400
200
0
Static pressure [Pa]
0
5,000
Airflow [m3/h]

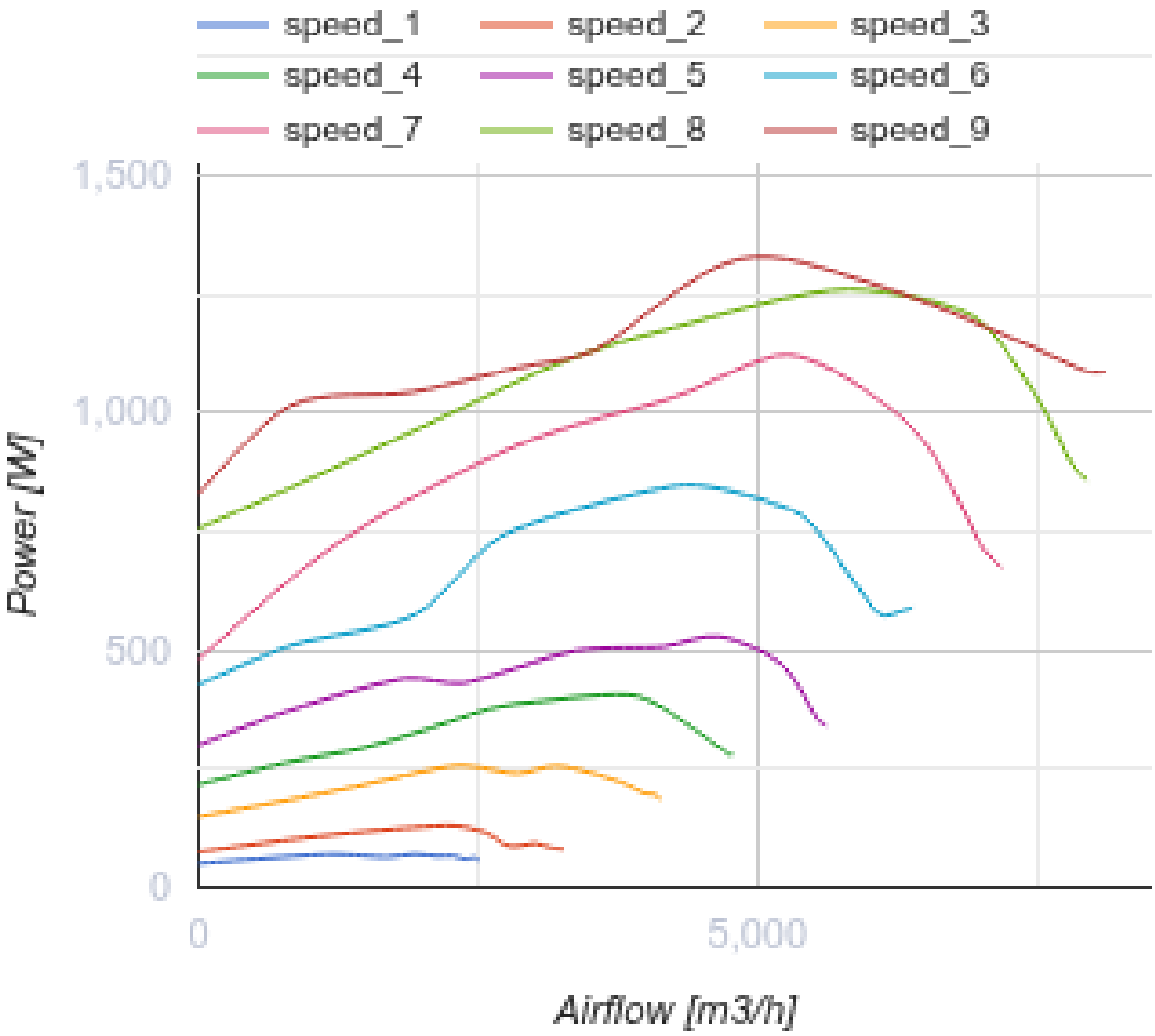

Dimensions

A	B	C
738	668	425

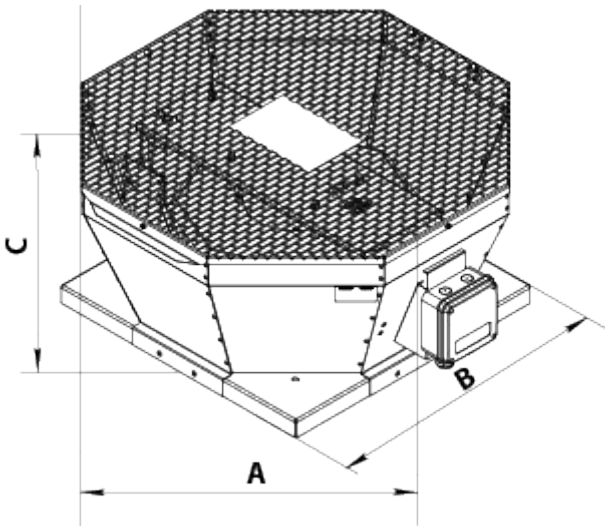

Accessories

Speed controllers for EC motors

Name	Photo	Description
R-1/010		Speed controller for EC motors

Accessories for roof fans

Name	Photo	Description
RKV 450-500		Mounting frame
RKVI 450-500		Mounting frame with thermal-insulating layer
FKV 355-500		Mating flange
GKV 355-500		Flexible connector
KKV 355-500		Backdraft damper

Ecodesign

Trademark	Vents
Model	VKVz 450 EC
Type of drive installed	Integrated VSD
Type of heat recovery system	None
Nominal external pressure (Pa)	597
Maximum external leakage rates (%)	2.7
Static efficiency (%)	66.7
Effective electric power input (kW)	1.323
Sound power level (dB(A))	83
Declared typology	NRVU UVU