VKVz 4D 500

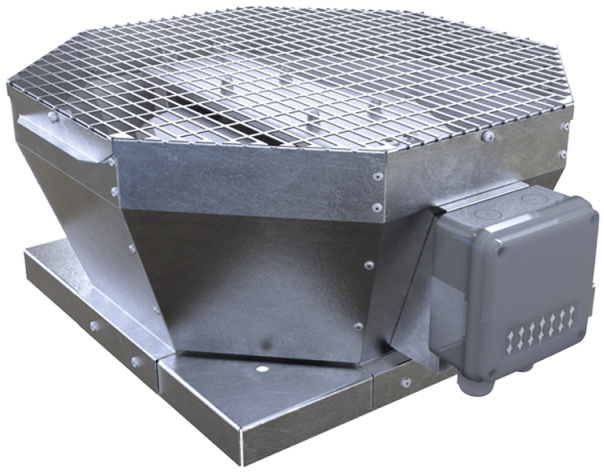

Roof centrifugal fans with vertical air discharge

• Sound pressure level LpA at 3 m: 62
• Impeller type: Centrifugal impeller with backward curved blades
• Casing material: Galvanized steel

	Unit of measurement	VKVz 4D 500
Phases	-	3
Minimum supply voltage	V	400
Maximum supply voltage	V	400
Power supply frequency	Hz	50
Rated power	W	1527
Unit current	A	2.64
Maximum airflow	m^3/h	8435
Rotation speed at 50hz	-	1460
Sound pressure level LpA at 3 m	dB(A)	62
Weight	kg	52
Transported air temperature (max)	°C	50
Transported air temperature (min)	°C	-30
Ingress protection rating	-	IPX4
Ingress protection rating of the drive	-	IP54
Impeller material	-	Aluminium
Size	mm	500

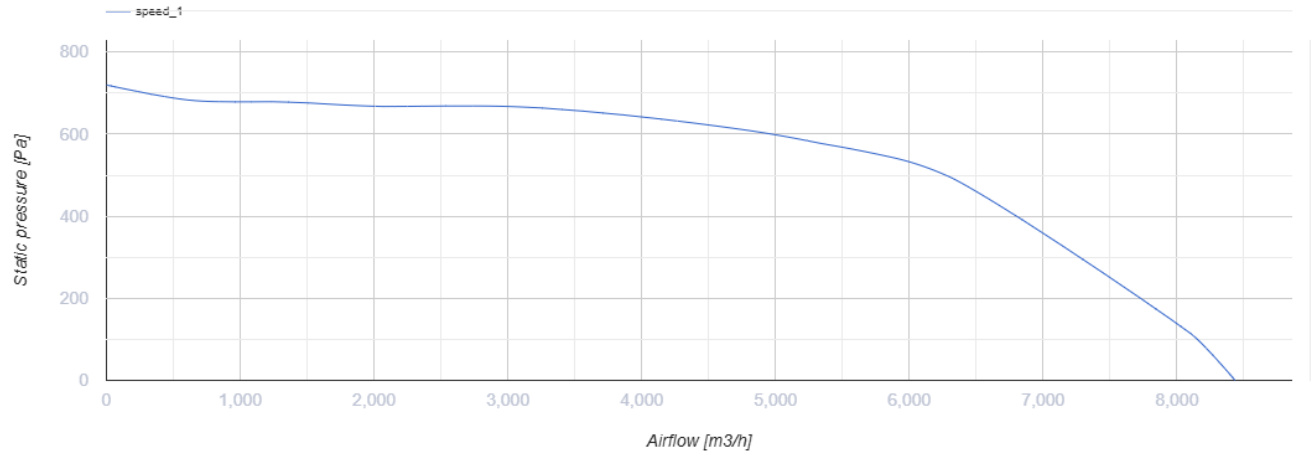

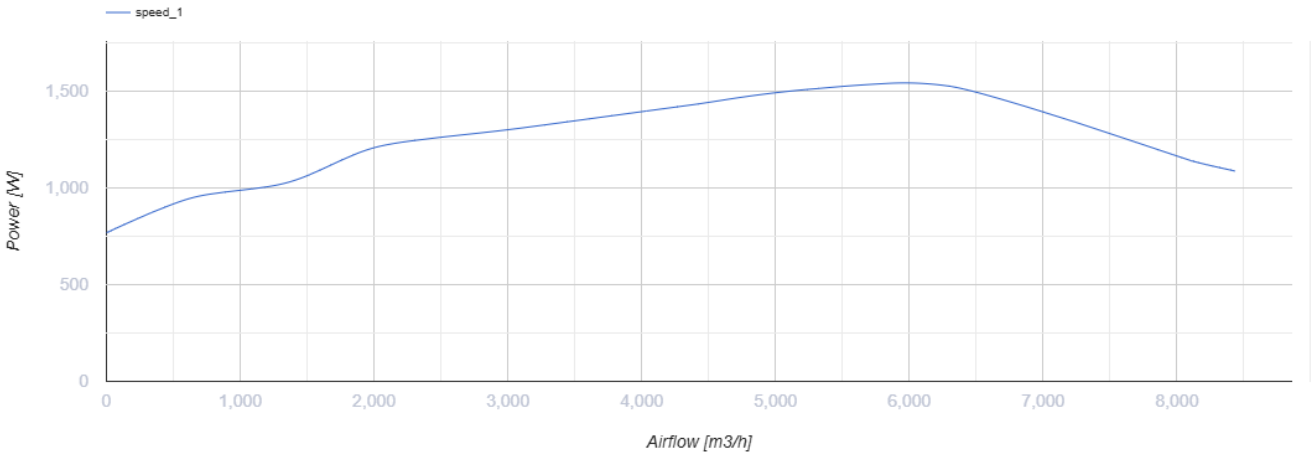

Dimensions

A	B	H	ØD
859	668	460	430

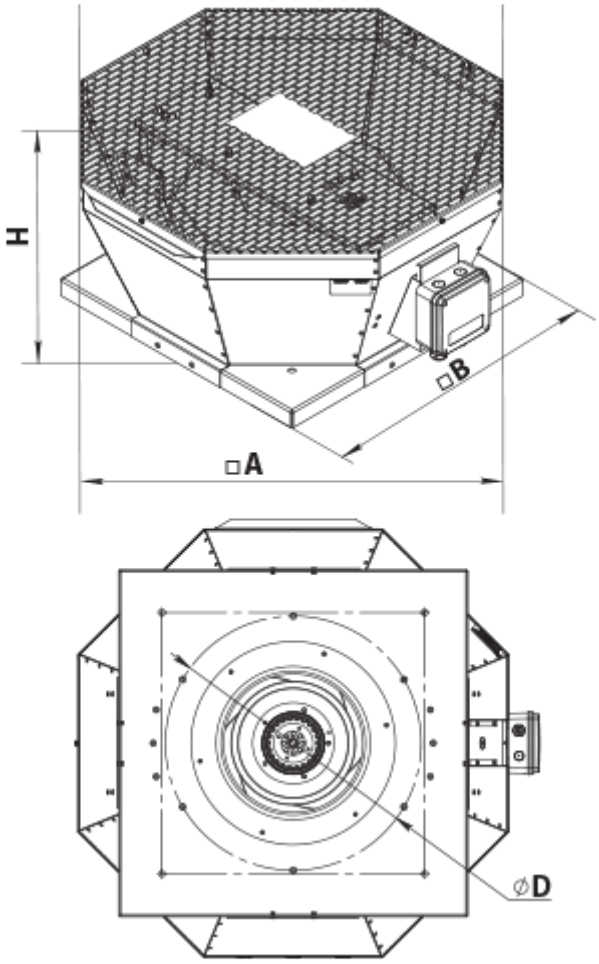

Accessories

Transformer speed controllers

Name	Photo	Description
RSA5D-4,0-M		Three phase speed controller

Accessories for roof fans

Name	Photo	Description
RKV 450-500		Mounting frame
RKVI 450-500		Mounting frame with thermal-insulating layer
FKV 355-500		Mating flange

GKV 355-500		Flexible connector
KKV 355-500		Backdraft damper

Ecodesign

Trademark	Vents
Model	VKVz 4D 500
Type of drive installed	External MSD or VSD
Type of heat recovery system	None
Nominal external pressure (Pa)	498
Maximum external leakage rates (%)	2.7
Static efficiency (%)	58.1
Declared typology	NRVU UVU
Effective electric power input (kW)	1.527
Sound power level (dB(A))	82