VKVz 4D 560

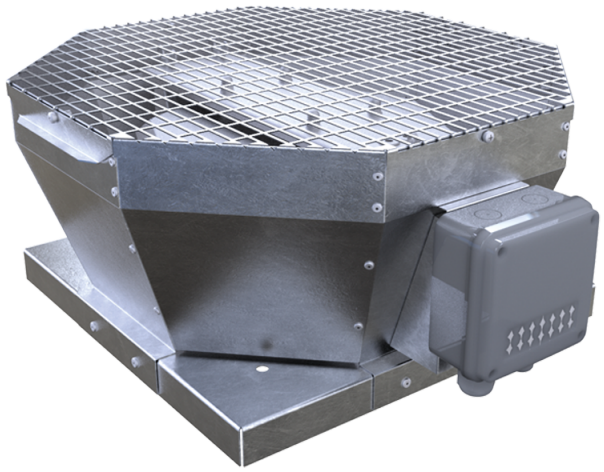

Roof centrifugal fans with vertical air discharge

• Sound pressure level LpA at 3 m: 66
• Impeller type: Centrifugal impeller with backward curved blades
• Casing material: Galvanized steel

	Unit of measurement	VKVz 4D 560
Phases	-	3
Minimum supply voltage	V	400
Maximum supply voltage	V	400
Power supply frequency	Hz	50
Rated power	W	1970
Unit current	A	3.36
Maximum airflow	m³/h	13560
Rotation speed at 50hz	-	1400
Sound pressure level LpA at 3 m	dB(A)	66
Weight	kg	63
Transported air temperature (max)	°C	50
Transported air temperature (min)	°C	-25
Ingress protection rating	-	IPX4
Ingress protection rating of the drive	-	IP54
Impeller material	-	Aluminium
Size	mm	560

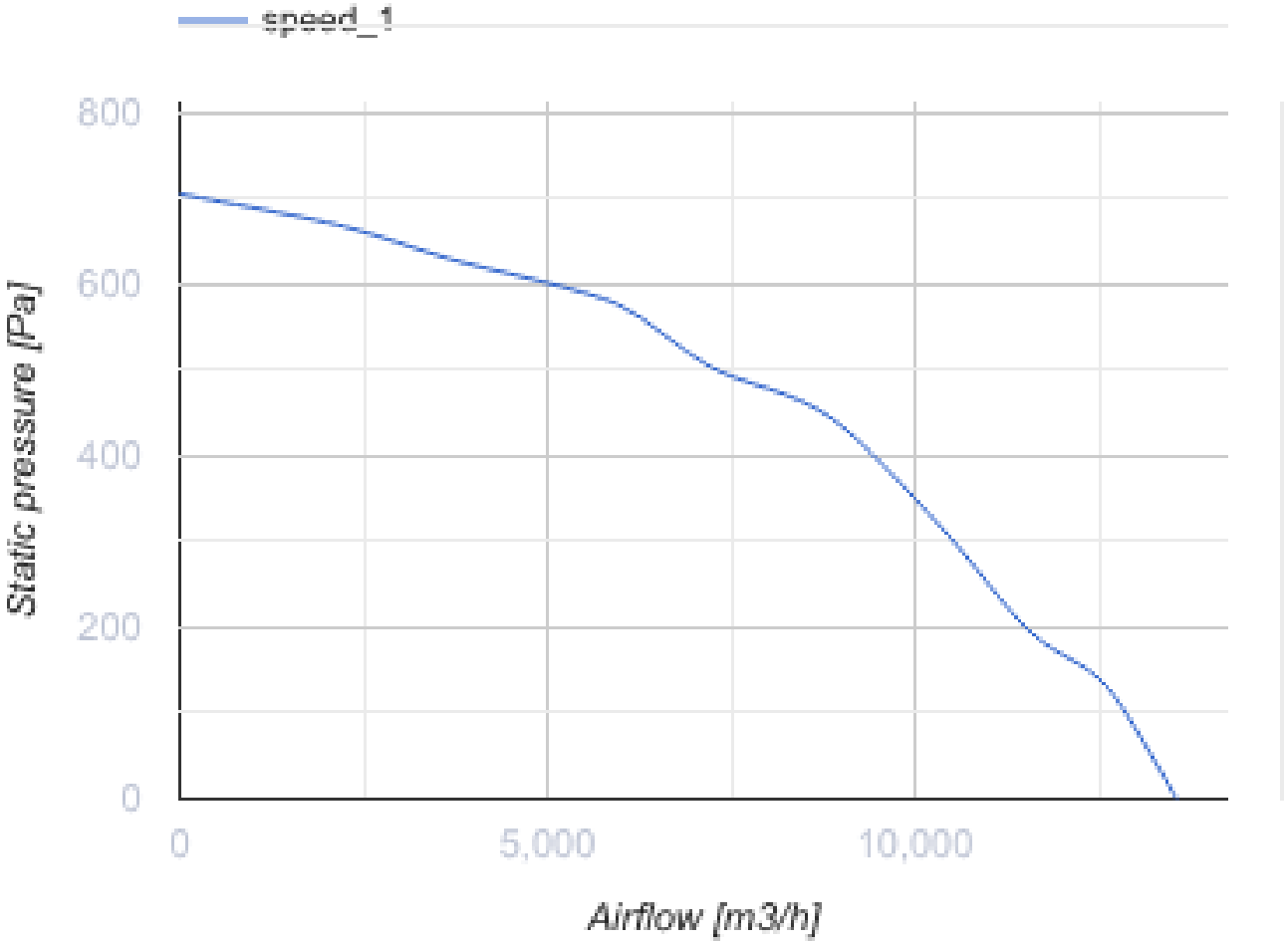
speed_1
800
600
400
200
0
Static pressure [Pa]
0
5,000
10,000
Airflow [m3/h]

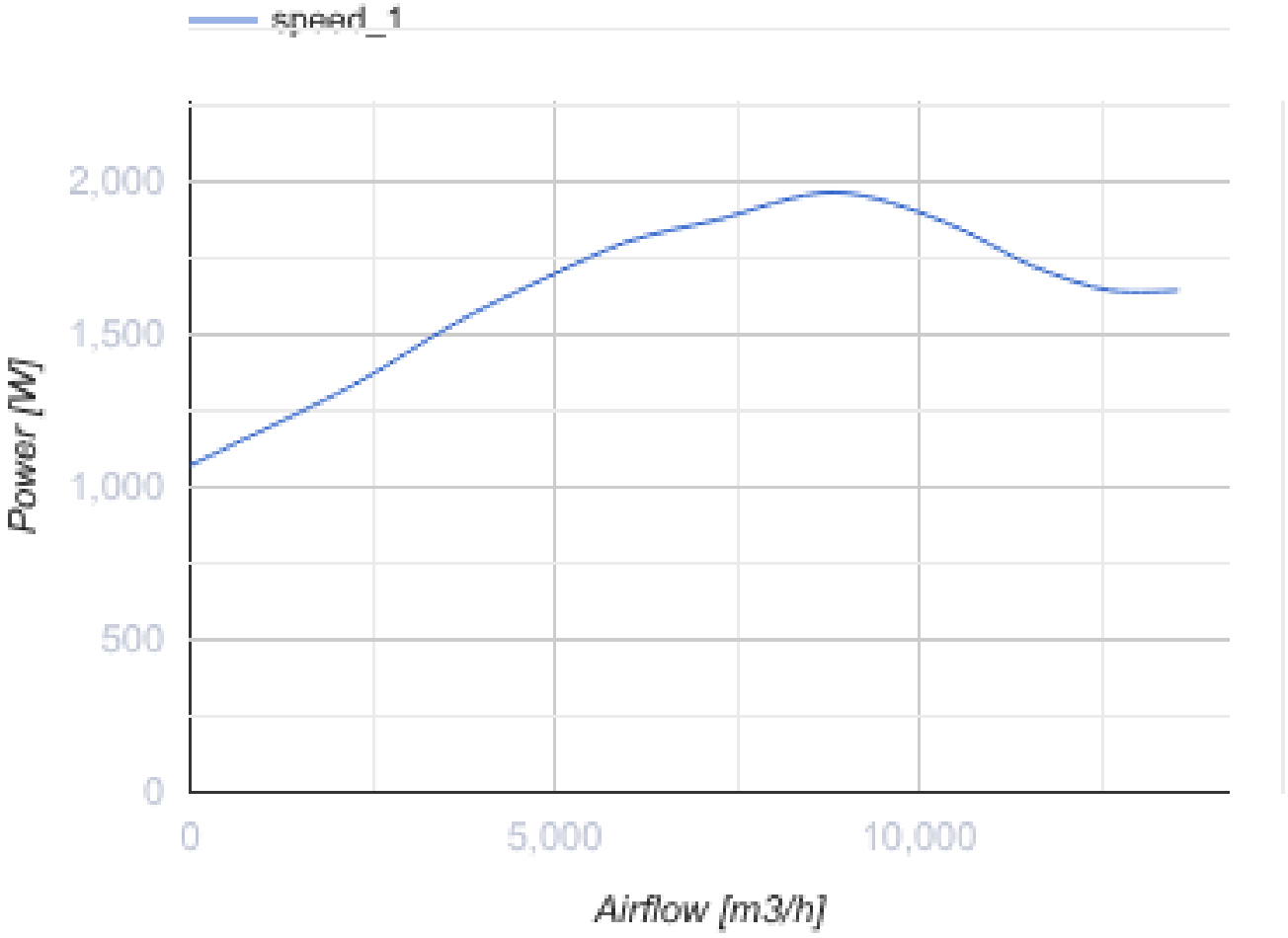

Dimensions

A	B	H	ØD
859	833	485	605

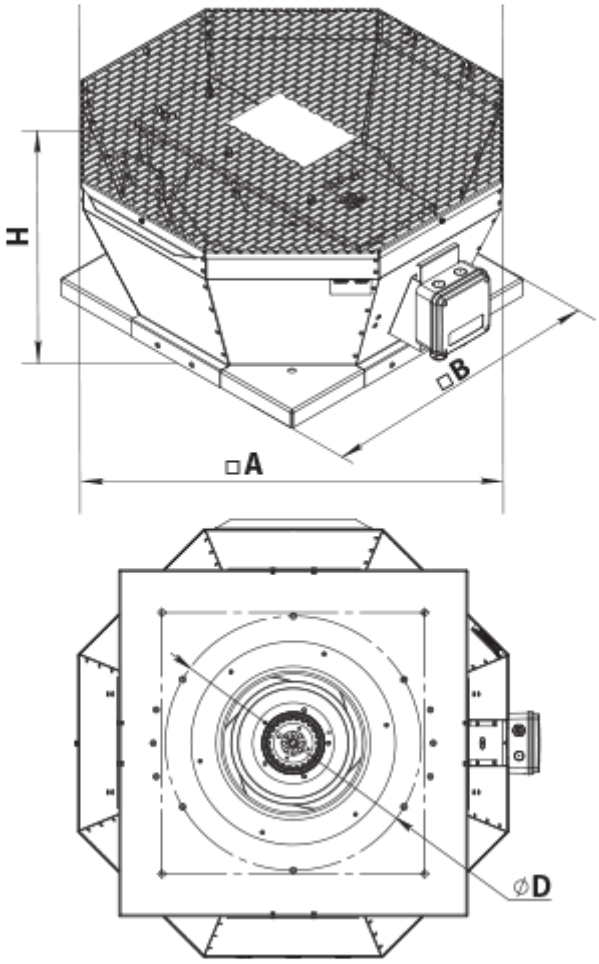

Accessories

Transformer speed controllers

Name	Photo	Description
RSA5D-4,0-M		Three phase speed controller

Accessories for roof fans

Name	Photo	Description
RKV 560		Mounting frame
RKVI 560		Mounting frame with thermal-insulating layer
FKV 560		Mating flange

GKV 560		Flexible connector
KKV 560		Backdraft damper

Ecodesign

Trademark	Vents
Model	VKVz 4D 560
Type of drive installed	External MSD or VSD
Type of heat recovery system	None
Nominal external pressure (Pa)	446
Maximum external leakage rates (%)	2.7
Static efficiency (%)	56.8
Declared typology	NRVU UVU
Effective electric power input (kW)	1.967
Sound power level (dB(A))	86