# VKVz 4E 450

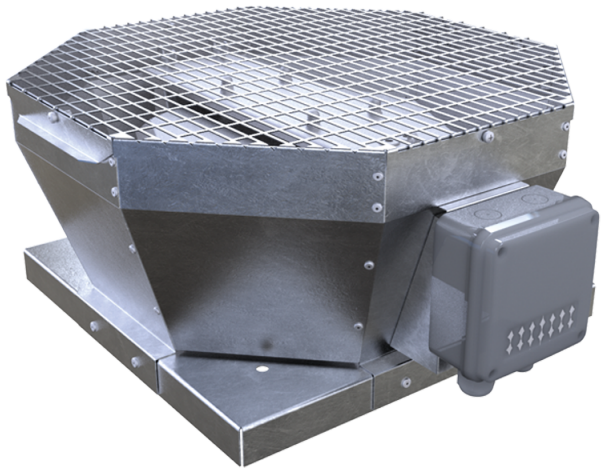

Roof centrifugal fans with vertical air discharge

• Sound pressure level LpA at 3 m: 58
• Impeller type: Centrifugal impeller with backward curved blades
• Casing material: Galvanized steel

| | Unit of measurement | VKVz 4E 450 |
|---|---|---|
| Phases | - | 1 |
| Minimum supply voltage | V | 230 |
| Maximum supply voltage | V | 230 |
| Power supply frequency | Hz | 50 |
| Rated power | W | 749 |
| Unit current | A | 3.35 |
| Maximum airflow | m³/h | 6180 |
| Rotation speed at 50hz | - | 1400 |
| Sound pressure level LpA at 3 m | dB(A) | 58 |
| Weight | kg | 41 |
| Transported air temperature (max) | °C | 60 |
| Transported air temperature (min) | °C | -30 |
| Ingress protection rating | - | IPX4 |
| Ingress protection rating of the drive | - | IP54 |
| Impeller material | - | Aluminium |
| Size | mm | 450 |

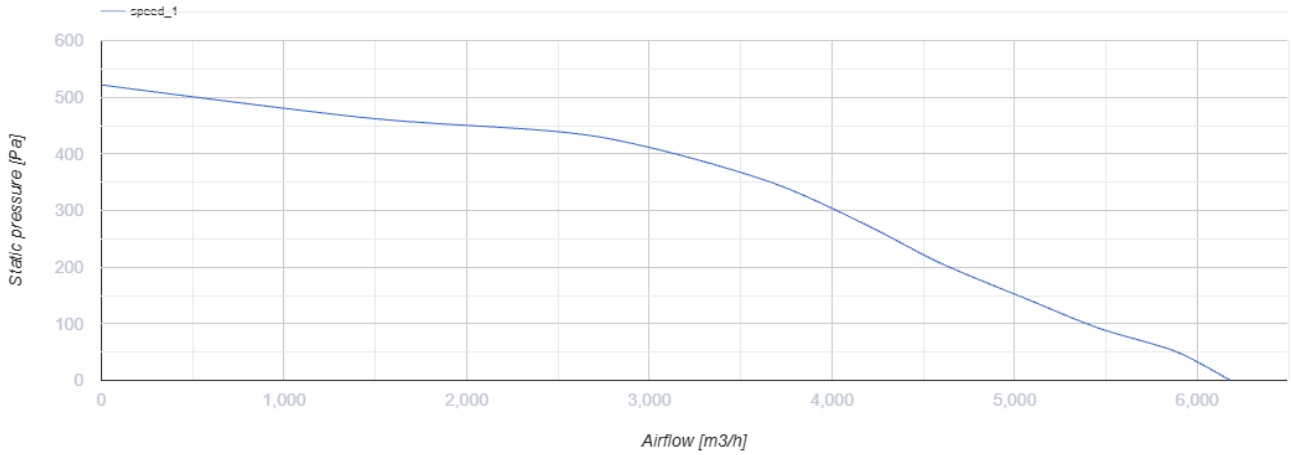


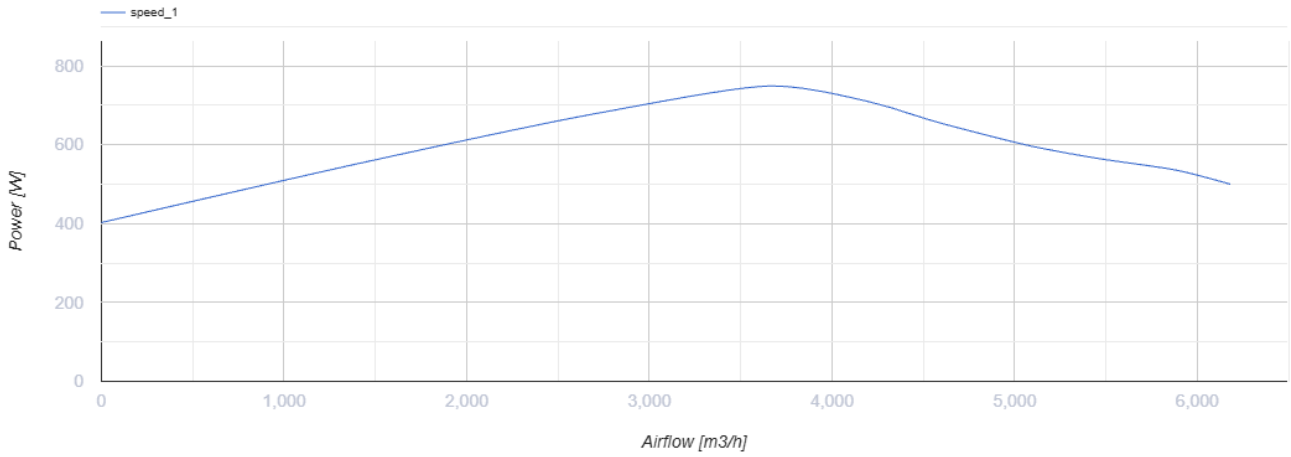


## Dimensions

| A | B | H | ØD |
|---|---|---|---|
| 738 | 668 | 430 | 438 |

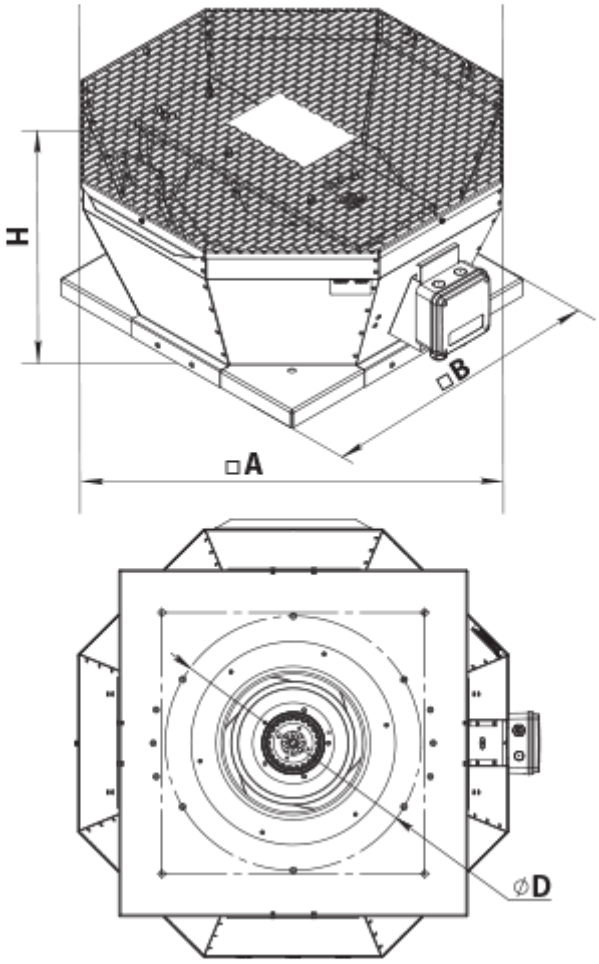


## Accessories

### Accessories for roof fans

| Name | Photo | Description |
|---|---|---|
| RKV 450-500 |  | Mounting frame |
| RKVI 450-500 |  | Mounting frame with thermal-insulating layer |
| FKV 355-500 |  | Mating flange |
| GKV 355-500 |  | Flexible connector |
| KKV 355-500 |  | Backdraft damper |

## Ecodesign

| Trademark | Vents |
|---|---|
| Model | VKVz 4E 450 |
| Type of drive installed | External MSD or VSD |
| Type of heat recovery system | None |
| Nominal external pressure (Pa) | 430 |
| Maximum external leakage rates (%) | 2.7 |
| Static efficiency (%) | 48.8 |
| Declared typology | NRVU UVU |
| Effective electric power input (kW) | 0.681 |
| Sound power level (dB(A)) | 78 |