VN-1A 80



Wall-mounted centrifugal high-resistance fans in a plastic casing with vertical air discharge and an additional right side spigot

- Sound pressure level LpA at 3 m: 36
- Control: Wired control panel
- Casing material: Plastic
- Backdraft protection: Backdraft damper

	Unit of measurement	VN-1A 80	
Speed	-	1	2
Connected air duct size	mm	80	
Phases	-	1	
Minimum supply voltage	V	220	
Maximum supply voltage	V	240	
Power supply frequency	Hz	50	
Rated power	W	15	25
Unit current	A	0.12	0.14
Maximum airflow	m³/h	35	63
Rotation speed at 50hz	-	890	1350
Sound pressure level LpA at 3 m	dB(A)	27	36
Weight	kg	2.7	
Ambient air temperature max	°C	40	
Ambient air temperature min	°C	1	
Ingress protection rating	-	IP55	

Dimensions

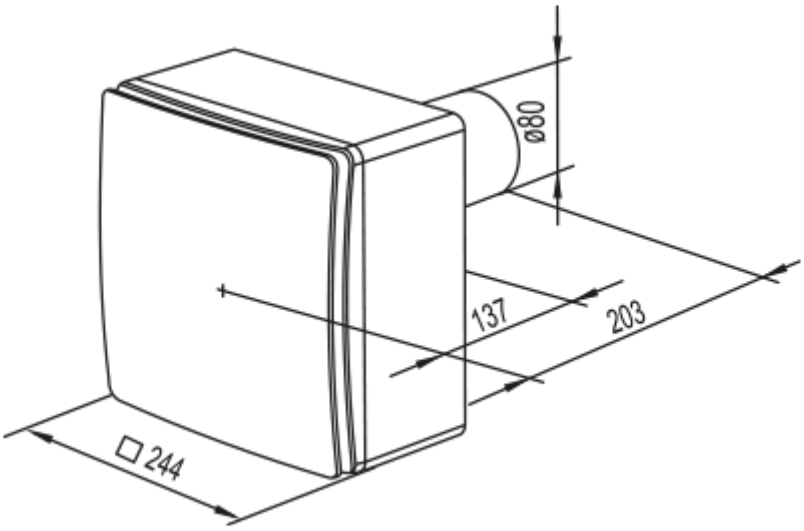

Accessories

Fittings

Name	Photo	Description
PVT 050/10		The adhesive PVC tape is an insulation tape made of plasticized PVC base covered with a glue layer
PVT 050/30		The adhesive PVC tape is an insulation tape made of plasticized PVC base covered with a glue layer
PVT 050/50		The adhesive PVC tape is an insulation tape made of plasticized PVC base covered with a glue layer

Flexible ducts

Name	Photo	Description
Polyvent N		Flexible uninsulated air duct made of metallized film

Window vents

Name	Photo	Description
PO 400		Window ventilators for supply ventilation

Ecodesign

Trademark	Vents					
Model	VN-1A 80					
Specific energy consumption (SEC) (kWh/(m²/a))	Cold		Average		Warm	
	-24.8	C	-8.4	F	1	G
Type of ventilation unit	Unidirectional					
Type of drive installed	Multi-speed					
Type of heat recovery system	None					
Maximum flow rate (m³/h)	61					
Electric power input (W)	17					
Reference flow rate (m³/s)	0.012					
Reference pressure difference (Pa)	50					
Specific power input (SPI) (W/(m³/h))	0.281					
Control typology	Manual control					
Maximum external leakage rates (%)	2.7					
Sound power level (dB(A))	46					
Declared typology	RVU UVU					
The annual electricity consumption (AEC) (kWh/a)	Cold		Average		Warm	
	352		352		352	
The annual heating saved (AHS) (kWh/a)	Cold		Average		Warm	
	3355		1715		776	