# VN-A 80 H



Wall-mounted centrifugal high-resistance fans in a plastic casing with vertical air discharge and an additional right side spigot

- Sound pressure level LpA at 3 m: 36
- Control: Wired control panel
- Casing material: Plastic
- Backdraft protection: Backdraft damper
- Humidity sensor: Built-in

| | Unit of measurement | VN-A 80 H | |
|---|---|---|---|
| Speed | - | 1 | 2 |
| Connected air duct size | mm | 80 | |
| Phases | - | 1 | |
| Minimum supply voltage | V | 220 | |
| Maximum supply voltage | V | 240 | |
| Power supply frequency | Hz | 50 | |
| Rated power | W | 15 | 25 |
| Unit current | A | 0.12 | 0.14 |
| Maximum airflow | $m^3/h$ | 35 | 63 |
| Rotation speed at 50hz | - | 890 | 1350 |
| Sound pressure level LpA at 3 m | dB(A) | 27 | 36 |
| Weight | kg | 2.7 | |
| Ambient air temperature min | °C | 1 | |
| Ambient air temperature max | °C | 40 | |
| Ingress protection rating | - | IP55 | |

## Dimensions

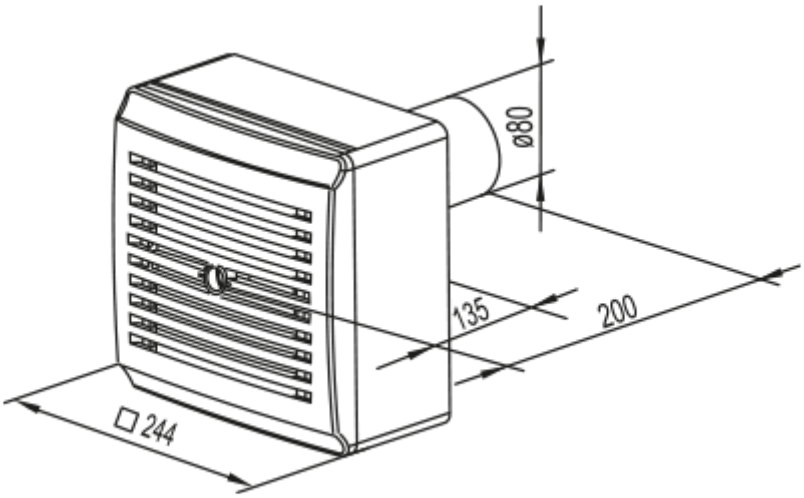


## Accessories

### Fittings

| Name | Photo | Description |
|---|---|---|
| PVT 050/10 |  | The adhesive PVC tape is an insulation tape made of plasticized PVC base covered with a glue layer |
| PVT 050/30 |  | The adhesive PVC tape is an insulation tape made of plasticized PVC base covered with a glue layer |
| PVT 050/50 |  | The adhesive PVC tape is an insulation tape made of plasticized PVC base covered with a glue layer |

### Flexible ducts

| Name | Photo | Description |
|---|---|---|
| Polyvent N |  | Flexible uninsulated air duct made of metallized film |

### Window vents

| Name | Photo | Description |
|---|---|---|
| PO 400 |  | Window ventilators for supply ventilation |

## Ecodesign

| Trademark | Vents | | | | | |
|---|---|---|---|---|---|---|
| Model | VN-A 80 H | | | | | |
| Specific energy consumption (SEC) (kWh/(m²/a)) | Cold | | Average | | Warm | |
| | -50.7 | A+ | -23.7 | C | -8.2 | F |
| Type of ventilation unit | Unidirectional | | | | | |
| Type of drive installed | Multi-speed | | | | | |
| Type of heat recovery system | None | | | | | |
| Maximum flow rate (m³/h) | 61 | | | | | |
| Electric power input (W) | 17 | | | | | |
| Reference flow rate (m³/s) | 0.012 | | | | | |
| Reference pressure difference (Pa) | 50 | | | | | |
| Specific power input (SPI) (W/(m³/h)) | 0.281 | | | | | |
| Control typology | Local demand control | | | | | |
| Maximum external leakage rates (%) | 2.7 | | | | | |
| Declared typology | RVU UVU | | | | | |
| Sound power level (dB(A)) | 46 | | | | | |
| The annual electricity consumption (AEC) (kWh/a) | Cold | | Average | | Warm | |
| | 184 | | 184 | | 184 | |
| The annual heating saved (AHS) (kWh/a) | Cold | | Average | | Warm | |
| | 5536 | | 2830 | | 1280 | |