VNV-1A 80 KVK-L I



Flush-mounted centrifugal high-resistance fans in a plastic casing with vertical air discharge and an additional left side spigot

- Sound pressure level LpA at 3 m: 36
- Control: Wired control panel
- Casing material: Plastic
- Backdraft protection: Backdraft damper
- Humidity sensor: Built-in

	Unit of measurement	VNV-1A 80 KVK-L I	
Speed	-	1	2
Connected air duct size	mm	80	
Phases	-	1	
Minimum supply voltage	V	220	
Maximum supply voltage	V	240	
Power supply frequency	Hz	50	
Rated power	W	15	25
Unit current	A	0.12	0.14
Maximum airflow	m³/h	35	63
Rotation speed at 50hz	-	890	1350
Sound pressure level LpA at 3 m	dB(A)	27	36
Weight	kg	2.7	
Ambient air temperature min	°C	1	
Ambient air temperature max	°C	40	
Ingress protection rating	-	IP55	

Dimensions

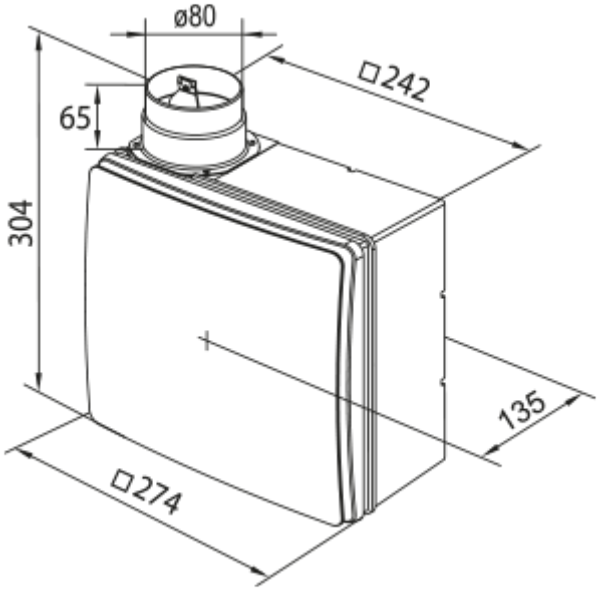

Accessories

Speed control switches

Name	Photo	Description
P2-1-300		Switch

Fittings

Name	Photo	Description
PVT 050/10		The adhesive PVC tape is an insulation tape made of plasticized PVC base covered with a glue layer
PVT 050/30		The adhesive PVC tape is an insulation tape made of plasticized PVC base covered with a glue layer
PVT 050/50		The adhesive PVC tape is an insulation tape made of plasticized PVC base covered with a glue layer

Flexible ducts

Name	Photo	Description
Polyvent N		Flexible uninsulated air duct made of metallized film

Mono-pipe

Name	Photo	Description

KVK-L 80		Centrifugal high-resistance fans in a plastic casing with a fire protection valve

Window vents

Name	Photo	Description
PO 400		Window ventilators for supply ventilation