VOK 2E 300

Roof axial fans

- Sound pressure level LpA at 3 m: 60
- Impeller type: Axial
- Casing material: Coated steel

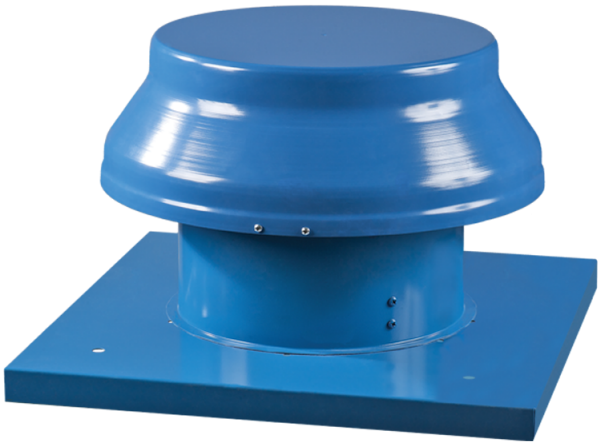

	Unit of measurement	VOK 2E 300
Connected air duct size	mm	300
Phases	-	1
Minimum supply voltage	V	220
Maximum supply voltage	V	240
Power supply frequency	Hz	50/60
Rated power	W	145
Unit current	A	0.66
Maximum airflow	m³/h	2230
Rotation speed at 50hz	-	2300
Sound pressure level LpA at 3 m	dB(A)	60
Weight	kg	10.5
Transported air temperature (max)	°C	60
Transported air temperature (min)	°C	-30
Ingress protection rating	-	IP24
Ingress protection rating of the drive	-	IP44
Impeller material	-	Coated steel
Size	mm	300

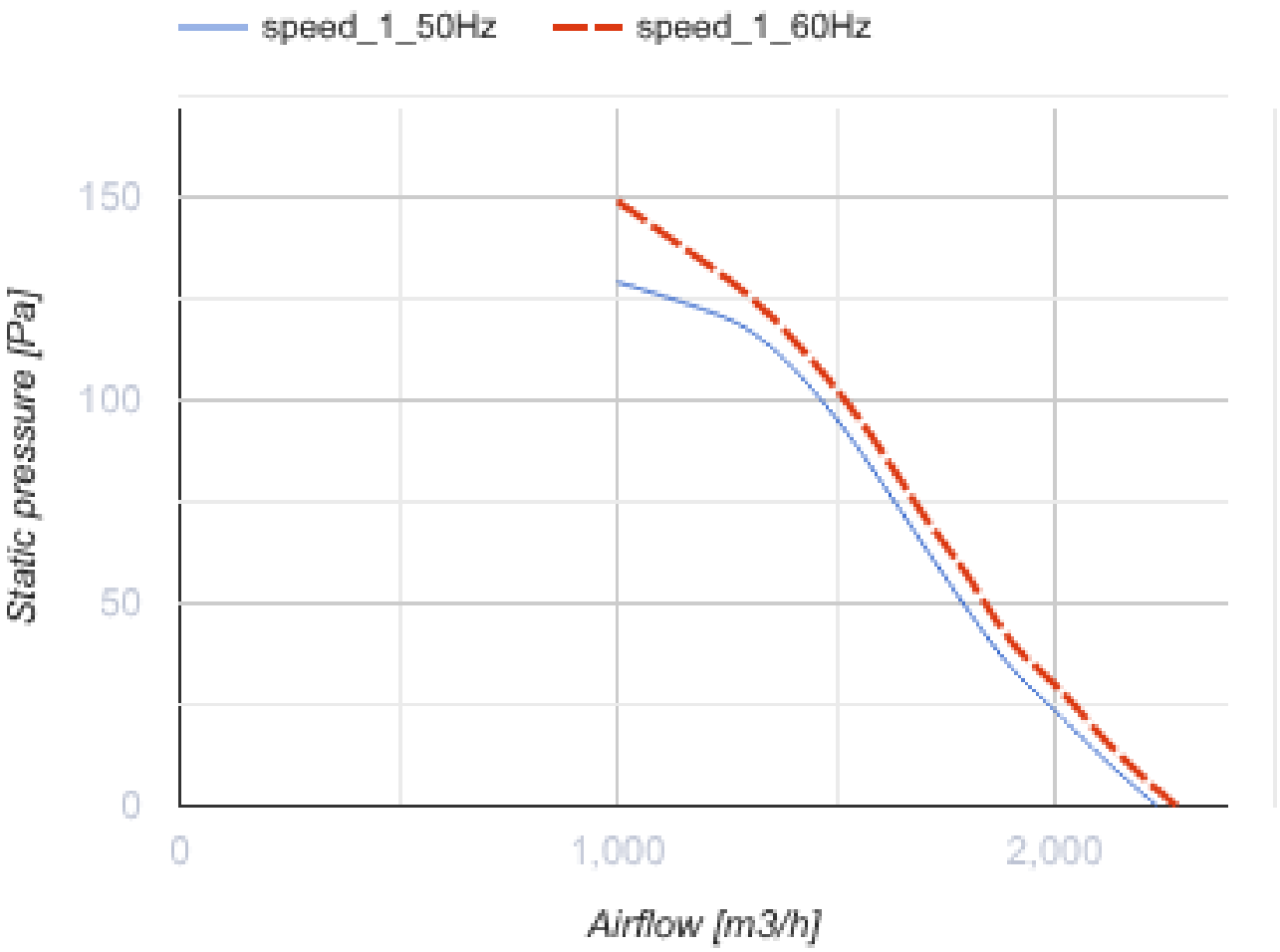
speed_1_50Hz
speed_1_60Hz
150
100
50
0
Static pressure [Pa]
0
1,000
2,000
Airflow [m3/h]

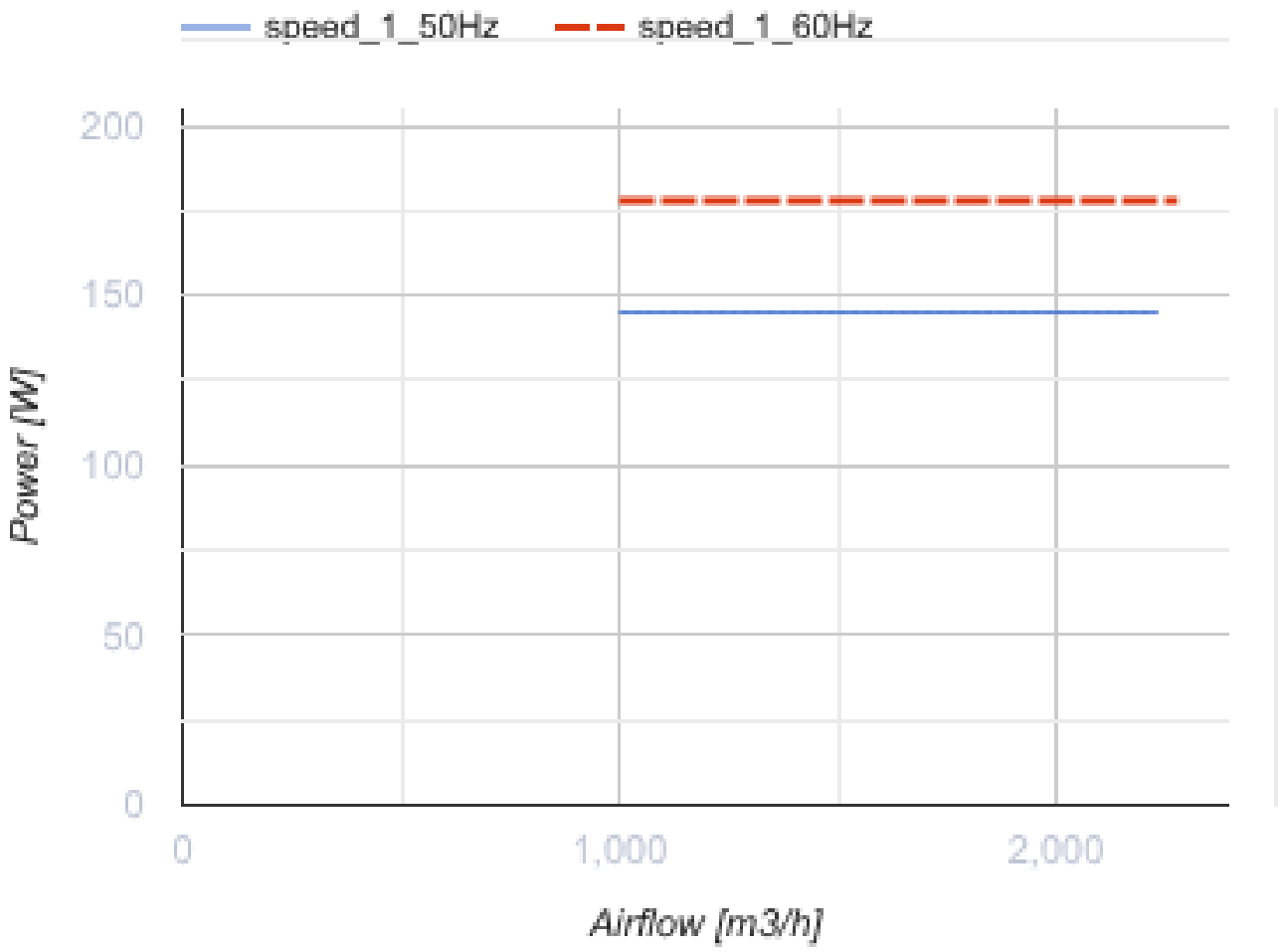

Dimensions

ØD	ØD1	H	L	L1
314	555	340	585	450

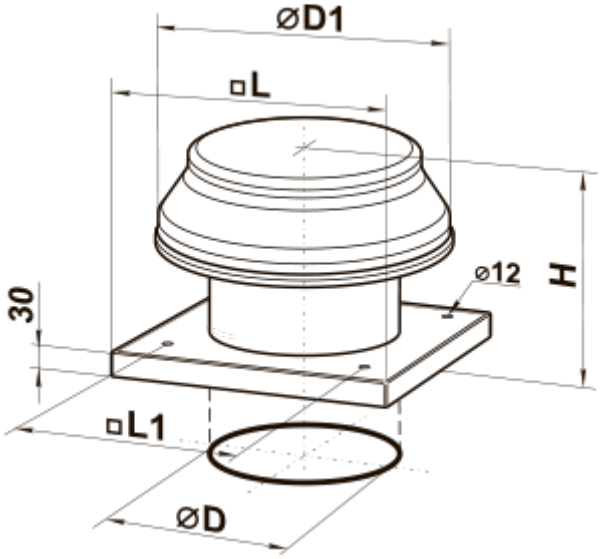

Accessories

Transformer speed controllers

Name	Photo	Description
RSA5E-3,5-T		Speed controllers are applied for air flow control of single phase fans by means of motor step speed control
RSA5E-5,0-T		Speed controllers are applied for air flow control of single phase fans by means of motor step speed control
RSA5E-7,5-T		Speed controllers are applied for air flow control of single phase fans by means of motor step speed control

Accessories for roof fans

Name	Photo	Description
RKV 250-315		Mounting frame
RKVI 250-315		Mounting frame with thermal-insulating layer

Ecodesign

Trademark	Vents
Model	VOK 2E 300
Type of drive installed	External MSD or VSD
Type of heat recovery system	None
Nominal external pressure (Pa)	110
Maximum external leakage rates (%)	2.7
Static efficiency (%)	30.5
Declared typology	NRVU UVU
Effective electric power input (kW)	0.141
Sound power level (dB(A))	80