VPA 150-3,4-1 LCD



Supply units in the compact sound- and heat-insulated casing with electric heater

- Power of electrical reheater: 3400
- Sound pressure level LpA at 3 m: 29
- Filter: G4
- Sound-insulated casing
- Reheater: Electric
- Control: Remote Control
- Casing material: Galvanized steel

	Unit of measurement	VPA 150-3,4-1 LCD
Connected air duct size	mm	150
Phases	-	1
Minimum supply voltage	V	230
Maximum supply voltage	V	230
Power supply frequency	Hz	50
Rated power	W	98
Power of electrical reheater	W	3400
Unit current	A	14.8
Maximum airflow	m³/h	425
Rotation speed at 50hz	-	2705
Sound pressure level LpA at 3 m	dB(A)	29
Weight	kg	52
Filter	-	G4
Transported air temperature (max)	°C	55
Transported air temperature (min)	°C	-25
Ambient air temperature max	°C	40
Ingress protection rating	-	IP22
Ambient air humidity max	%	80
Ingress protection rating of the drive	-	IP44

Dimensions

ØD	B	B1	H	L	L1
149	455	496.5	438	800	647

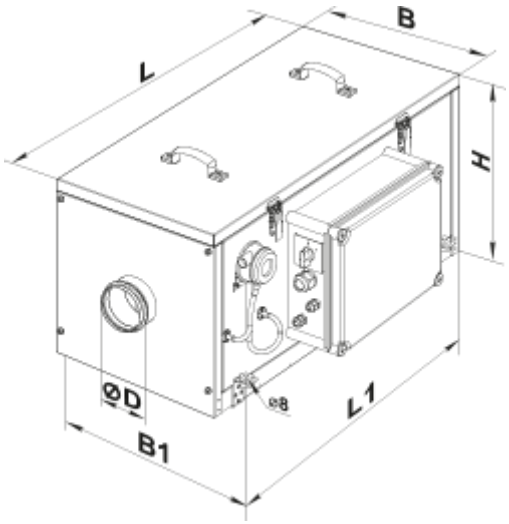

Accessories

For round ducts

Name	Photo	Description
SR 150/600		Silencers made of galvanized steel filled with non-combustible sound-absorbing material
SR 150/900		Silencers made of galvanized steel filled with non-combustible sound-absorbing material
SR 150/1200		Silencers made of galvanized steel filled with non-combustible sound-absorbing material
SRF 150/600		Silencers made of aluminium alloy filled with non-combustible sound-absorbing material
SRF 150/900		Silencers made of aluminium alloy filled with non-combustible sound-absorbing material
SRF 150/2000		Silencers made of aluminium alloy filled with non-combustible sound-absorbing material

For round ducts

Name	Photo	Description

KOM 150		Backdraught damper with spring-loaded plates for shutting off air flow in round air ducts
KRV 150		Air dampers for automatic air flow control in round ducts

For round ducts

Name	Photo	Description
VVG 150	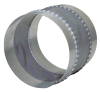	Flexible anti-vibration inserts for round ducts

Other accessories

Name	Photo	Description
SF 397x364x70 G4		Panel filter G4