VPA 200-6,0-3 LCD



Supply units in the compact sound- and heat-insulated casing with electric heater

- Power of electrical reheater: 6000
- Sound pressure level LpA at 3 m: 30
- Filter: G4
- Sound-insulated casing
- Reheater: Electric
- Control: Remote Control
- Casing material: Galvanized steel

	Unit of measurement	VPA 200-6,0-3 LCD
Connected air duct size	mm	200
Phases	-	3
Minimum supply voltage	V	400
Maximum supply voltage	V	400
Power supply frequency	Hz	50
Rated power	W	193
Power of electrical reheater	W	6000
Unit current	A	8.7
Maximum airflow	m³/h	810
Rotation speed at 50hz	-	2780
Sound pressure level LpA at 3 m	dB(A)	30
Weight	kg	52
Filter	-	G4
Transported air temperature (max)	°C	55
Transported air temperature (min)	°C	-25
Ambient air temperature max	°C	40
Ingress protection rating	-	IP22
Ambient air humidity max	%	80
Ingress protection rating of the drive	-	IP44

Dimensions

ØD	B	B1	H	L	L1
199	487	526.5	513	835	684

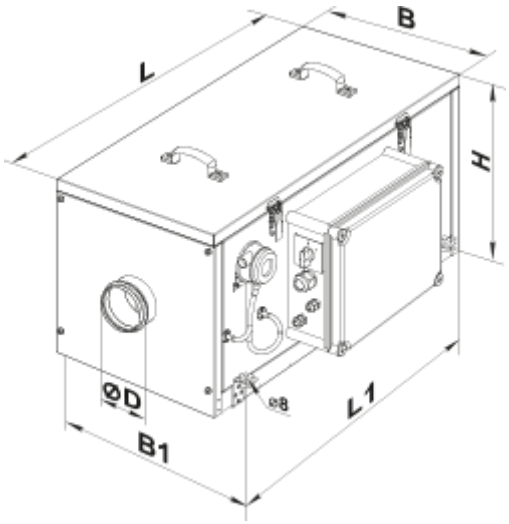

Accessories

For round ducts

Name	Photo	Description
SR 200/600		Silencers made of galvanized steel filled with non-combustible sound-absorbing material
SR 200/900		Silencers made of galvanized steel filled with non-combustible sound-absorbing material
SR 200/1200		Silencers made of galvanized steel filled with non-combustible sound-absorbing material
SRF 200/600		Silencers made of aluminium alloy filled with non-combustible sound-absorbing material
SRF 200/900		Silencers made of aluminium alloy filled with non-combustible sound-absorbing material
SRF 200/2000		Silencers made of aluminium alloy filled with non-combustible sound-absorbing material

For round ducts

Name	Photo	Description

KOM 200		Backdraught damper with spring-loaded plates for shutting off air flow in round air ducts
KRV 200		Air dampers for automatic air flow control in round ducts

For round ducts

Name	Photo	Description
VVG 200	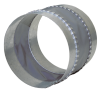	Flexible anti-vibration inserts for round ducts

Other accessories

Name	Photo	Description
SF 439x428x70 G4		Panel filter G4