VPA 315-6,0-3 LCD



Supply units in the compact sound- and heat-insulated casing with electric heater

- Power of electrical reheater: 6000
- Sound pressure level LpA at 3 m: 30
- Filter: G4
- Sound-insulated casing
- Reheater: Electric
- Control: Remote Control
- Casing material: Galvanized steel

	Unit of measurement	VPA 315-6,0-3 LCD
Connected air duct size	mm	315
Phases	-	3
Minimum supply voltage	V	400
Maximum supply voltage	V	400
Power supply frequency	Hz	50
Rated power	W	171
Power of electrical reheater	W	6000
Unit current	A	8.7
Maximum airflow	m³/h	1190
Rotation speed at 50hz	-	2600
Sound pressure level LpA at 3 m	dB(A)	30
Weight	kg	60
Filter	-	G4
Transported air temperature (max)	°C	55
Transported air temperature (min)	°C	-25
Ambient air temperature max	°C	40
Ingress protection rating	-	IP22
Ambient air humidity max	%	80
Ingress protection rating of the drive	-	IP44

Dimensions

ØD	B	B1	H	L	L1
314	527	566.5	548	900	750

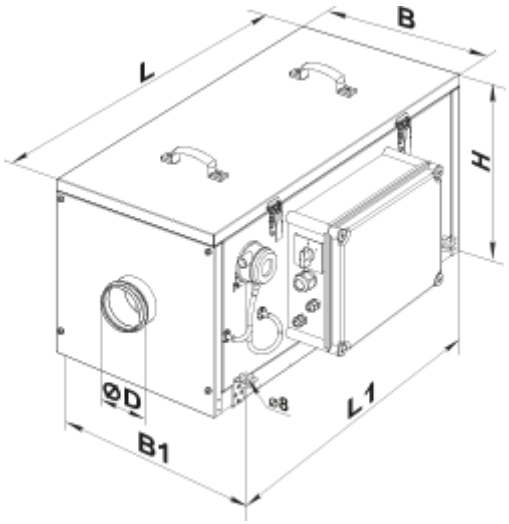

Accessories

For round ducts

Name	Photo	Description
SR 315/600		Silencers made of galvanized steel filled with non-combustible sound-absorbing material
SR 315/900		Silencers made of galvanized steel filled with non-combustible sound-absorbing material
SR 315/1200		Silencers made of galvanized steel filled with non-combustible sound-absorbing material
SRF 315/600		Silencers made of aluminium alloy filled with non-combustible sound-absorbing material
SRF 315/900		Silencers made of aluminium alloy filled with non-combustible sound-absorbing material
SRF 315/2000		Silencers made of aluminium alloy filled with non-combustible sound-absorbing material

For round ducts

Name	Photo	Description

KOM 315		Backdraught damper with spring-loaded plates for shutting off air flow in round air ducts
KRV 315		Air dampers for automatic air flow control in round ducts

For round ducts

Name	Photo	Description
VVG 315	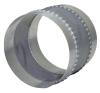	Flexible anti-vibration inserts for round ducts

Other accessories

Name	Photo	Description
SF 475x470x70 G4		Panel filter G4