VUE 300 V2 mini EC A2

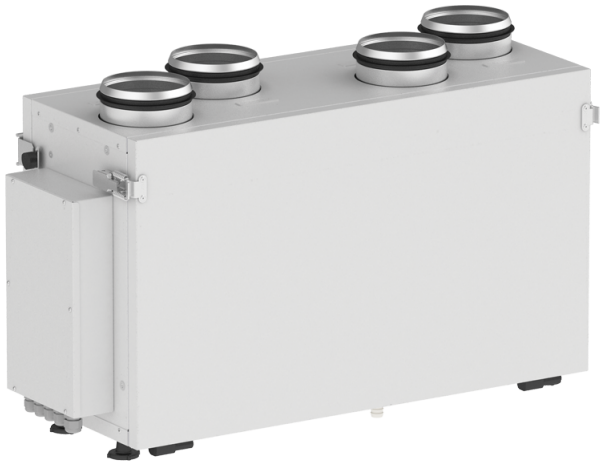

Suspended air handling units with a crossflow polystyrene heat exchanger

- Sound pressure level LpA at 3 m: 33
- Heat exchanger type: Cross flow
- Heat exchanger material: Polystyrene
- Supply filter: G4, F8
- Extract filter: G4
- Sound-insulated casing
- Enthalpy heat exchanger
- Control: Remote Control
- Casing material: Galvanized steel
- CO2 sensor: Optional
- PM2.5 sensor: Optional

	Unit of measurement	VUE 300 V2 mini EC A2
Connected air duct size	mm	125
Phases	-	1
Maximum supply voltage	V	230
Minimum supply voltage	V	230
Power supply frequency	Hz	50/60
Rated power	W	165
Unit current	A	1.3
Maximum airflow	m³/h	300
Rotation speed at 50hz	-	2050
Sound pressure level LpA at 3 m	dB(A)	33
Heat recovery efficiency, max	%	79
Heat exchanger type	-	Cross flow
Heat exchanger material	-	Polystyrene
Weight	kg	32
Supply filter	-	G4, F8
Extract filter	-	G4
Transported air temperature (max)	°C	60
Transported air temperature (min)	°C	-25
Ambient air temperature min	°C	1

Ambient air temperature max	°C	40
Ingress protection rating	-	IP22
Ambient air humidity max	%	80
Ingress protection rating of the drive	-	IP44

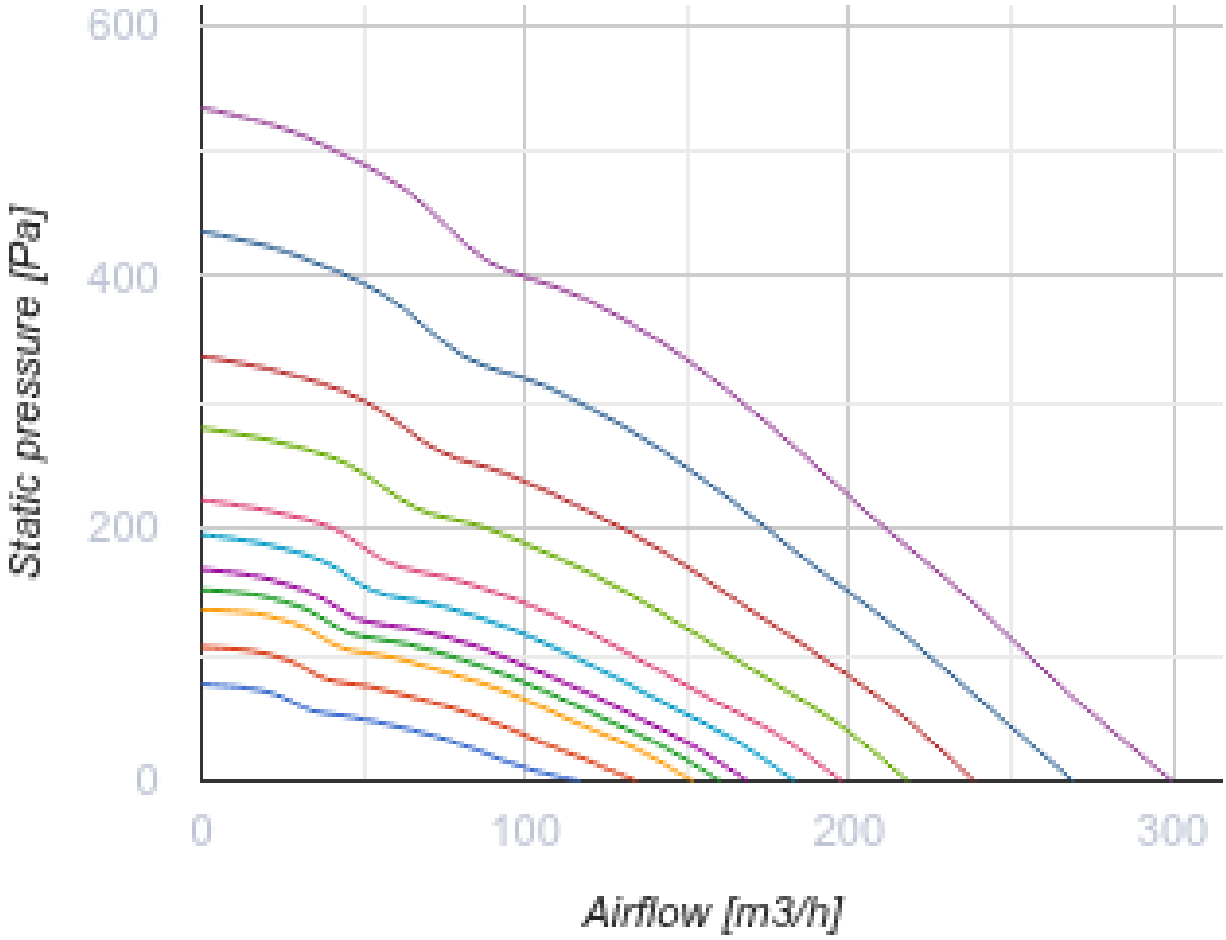

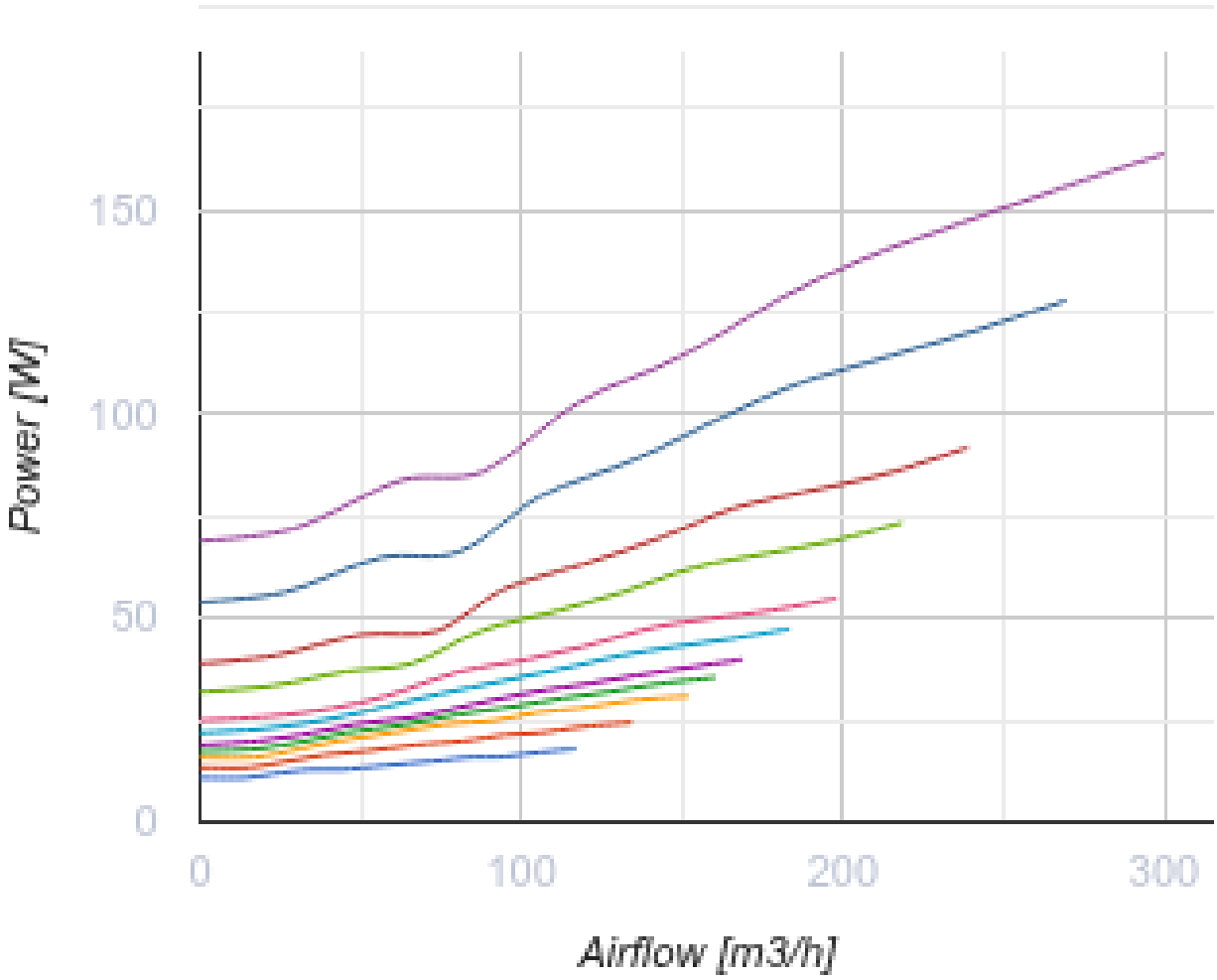

Dimensions

ØD	B	H	H1	L	L1
125	287	447	495	714	776

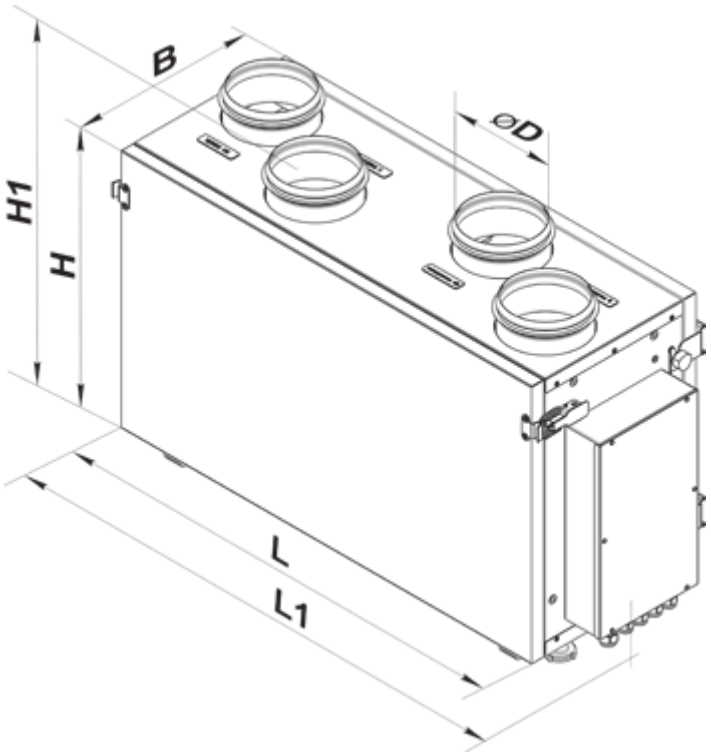

Accessories

Condensation drainage

Name	Photo	Description
SH-32		Hydraulic U-trap to drain condensate from heat exchangers and coolers

For round ducts

Name	Photo	Description
SR 125/600		Silencers made of galvanized steel filled with non-combustible sound-absorbing material
SR 125/900		Silencers made of galvanized steel filled with non-combustible sound-absorbing material
SR 125/1200		Silencers made of galvanized steel filled with non-combustible sound-absorbing material
SRF 125/600		Silencers made of aluminium alloy filled with non-combustible sound-absorbing material
SRF 125/900		Silencers made of aluminium alloy filled with non-combustible sound-absorbing material

SRF 125/2000		Silencers made of aluminium alloy filled with non-combustible sound-absorbing material

For round ducts

Name	Photo	Description
KOM 125		Backdraught damper with spring-loaded plates for shutting off air flow in round air ducts
KRV 125		Air dampers for automatic air flow control in round ducts

Other accessories

Name	Photo	Description
SF 240x184x40 G4		Panel filter G4
SF 240x184x40 F8		F8 panel filter

Ecodesign

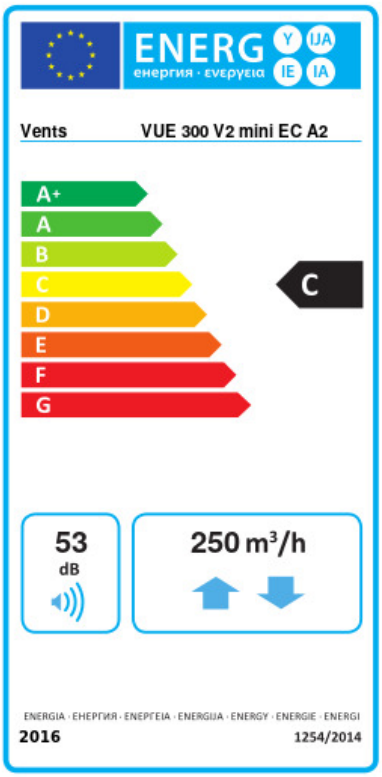

Trademark	Vents					
Model	VUE 300 V2 mini EC A2					
Specific energy consumption (SEC) (kWh/(m²/a))	Cold		Average		Warm	
	-54.1	A+	-25.4	C	-6.3	F
Type of ventilation unit	Bidirectional					
Type of drive installed	Variable speed					
Type of heat recovery system	Recuperative					
Thermal efficiency of heat recovery (%)	58					
Maximum flow rate (m³/h)	250					
Electric power input (W)	150					
Reference flow rate (m³/s)	0.044					
Reference pressure difference (Pa)	50					
Specific power input (SPI) (W/(m³/h))	0.313					
Control typology	Manual control					
Maximum internal leakage rates (%)	2.7					
Maximum external leakage rates (%)	2.7					
Declared typology	RVU BVU					
Sound power level (dB(A))	53					
The annual electricity consumption (AEC) (kWh/a)	Cold		Average		Warm	
	973		436		391	
The annual heating saved (AHS) (kWh/a)	Cold		Average		Warm	
	6969		3563		1611	