VUE 80 P R mini

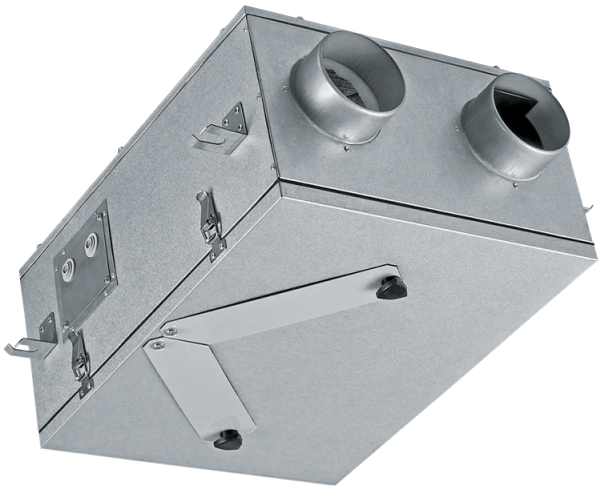

Heat recovery air handling units in sound- and heat-insulated casings

- Sound pressure level LpA at 3 m: 19
- Heat exchanger type: Cross flow
- Heat exchanger material: Enthalpy
- Supply filter: G4 / Coarse > 60%
- Extract filter: G4 / Coarse > 60%
- Sound-insulated casing
- Enthalpy heat exchanger
- Casing material: Aluzinc

	Unit of measurement	VUE 80 P R mini		
Speed	-	1	2	3
Connected air duct size	mm	125		
Phases	-	1		
Maximum supply voltage	V	230		
Minimum supply voltage	V	230		
Power supply frequency	Hz	50/60		
Rated power	W	22	32	56
Unit current	A	0.15	0.2	0.34
Maximum airflow	m³/h	40	55	70
Sound pressure level LpA at 3 m	dB(A)	13	15	19
Heat recovery efficiency, max	%	62		
Heat exchanger type	-	Cross flow		
Heat exchanger material	-	Enthalpy		
Weight	kg	10		
Supply filter	-	G4 / Coarse > 60%		
Extract filter	-	G4 / Coarse > 60%		
Transported air temperature (max)	°C	40		
Transported air temperature (min)	°C	-15		
Ambient air temperature min	°C	1		
Ambient air temperature max	°C	40		
Ingress protection rating	-	IP22		

Ambient air humidity max	%	60
Ingress protection rating of the drive	-	IP44

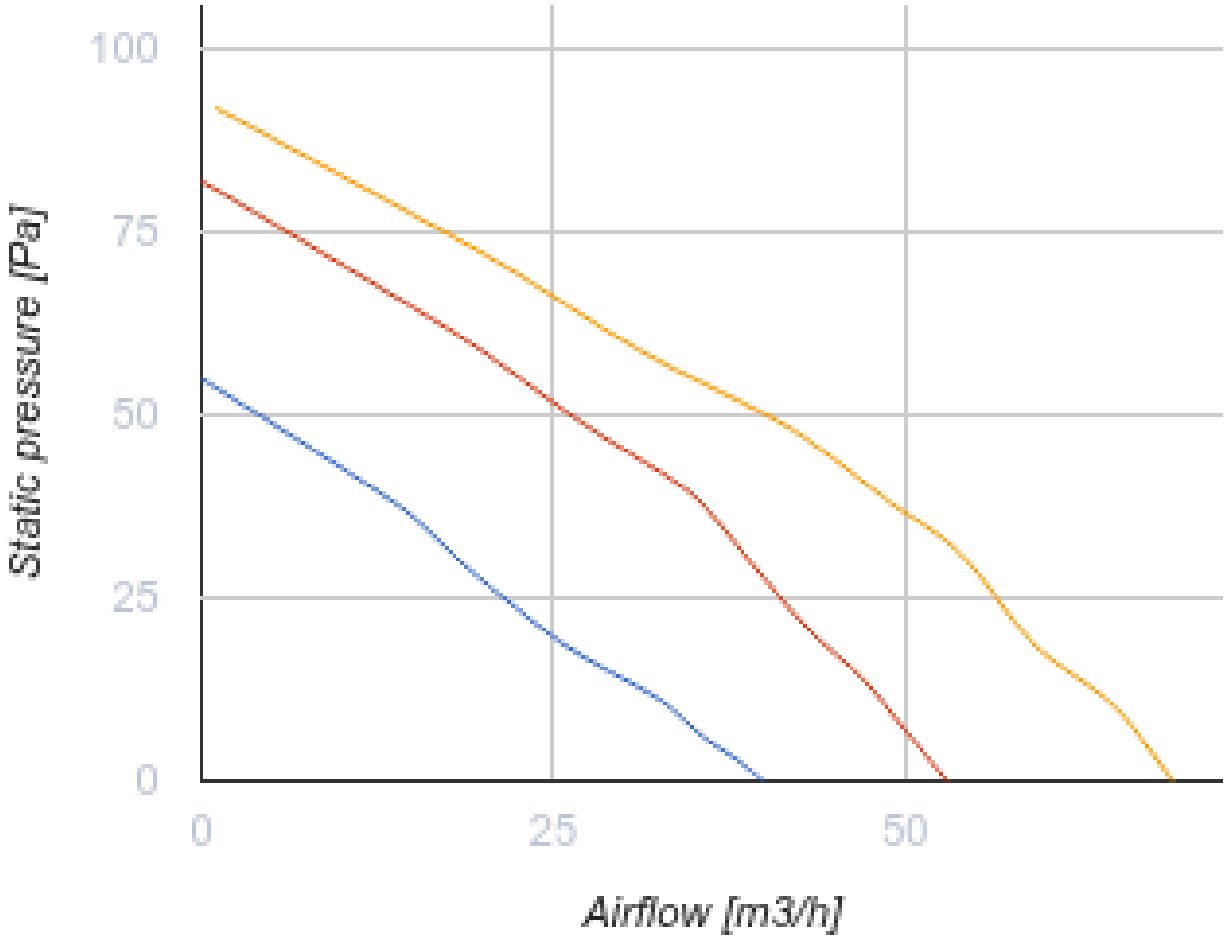

Dimensions

ØD	H	L	L1	W	W1	W2	W3
125	222	497	397	374	404	213	164

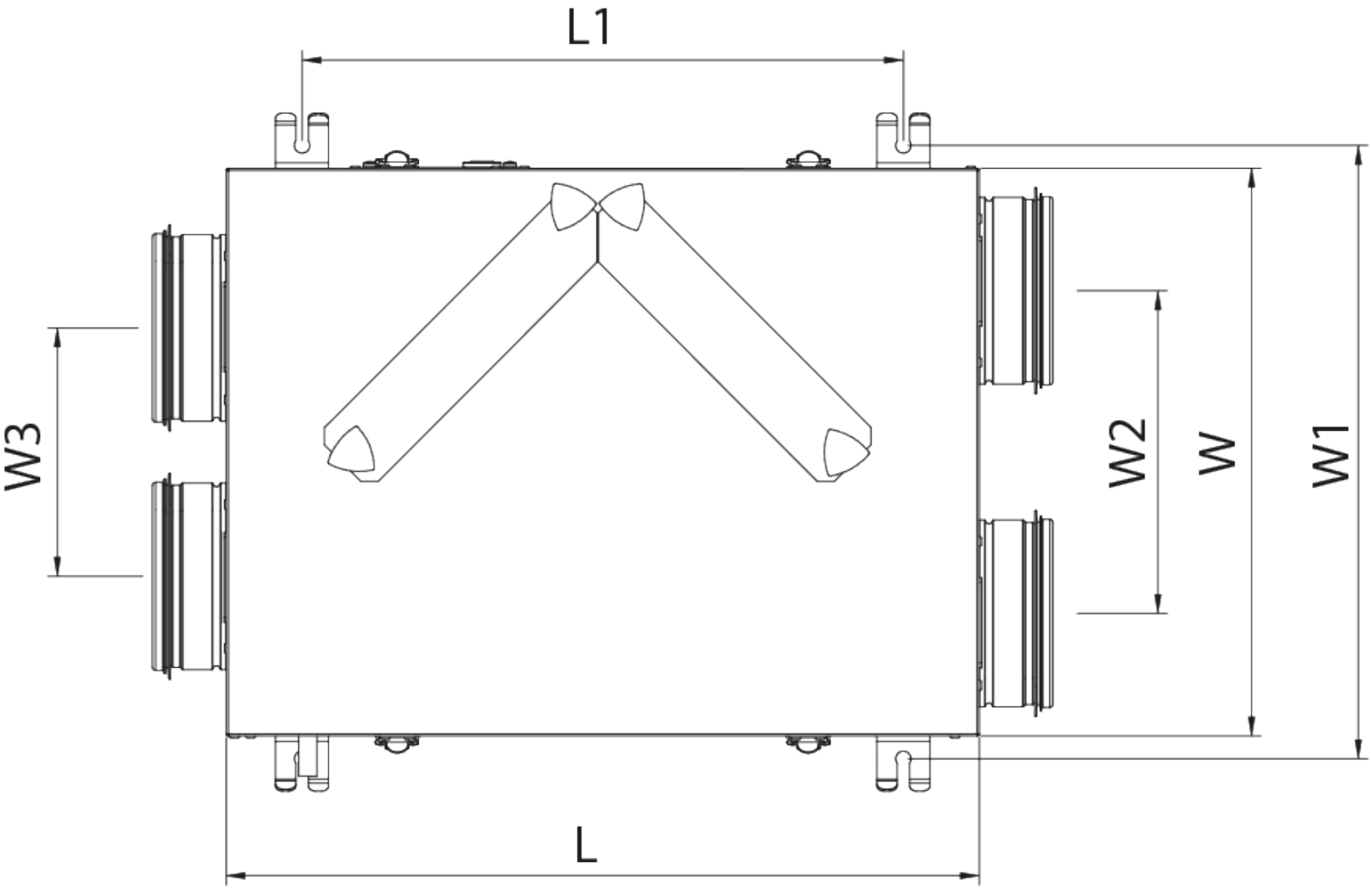
L1
W3
W2
W
W1
L

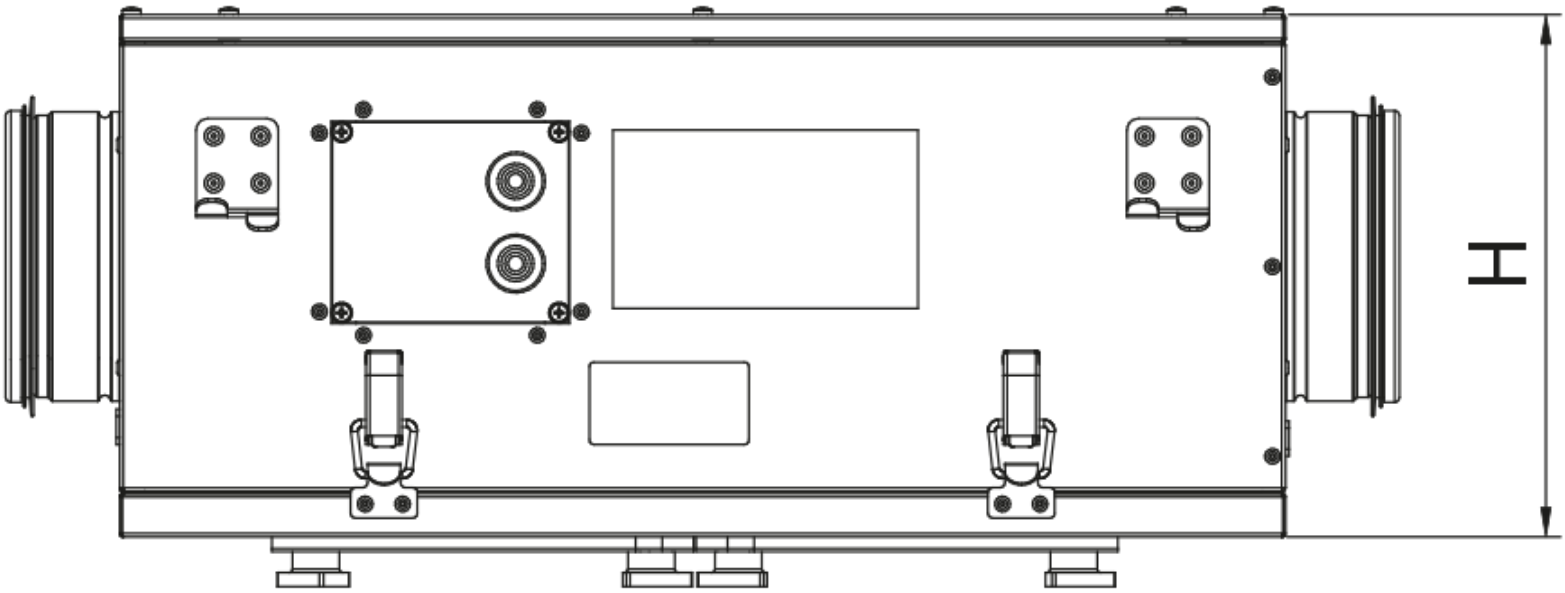
H

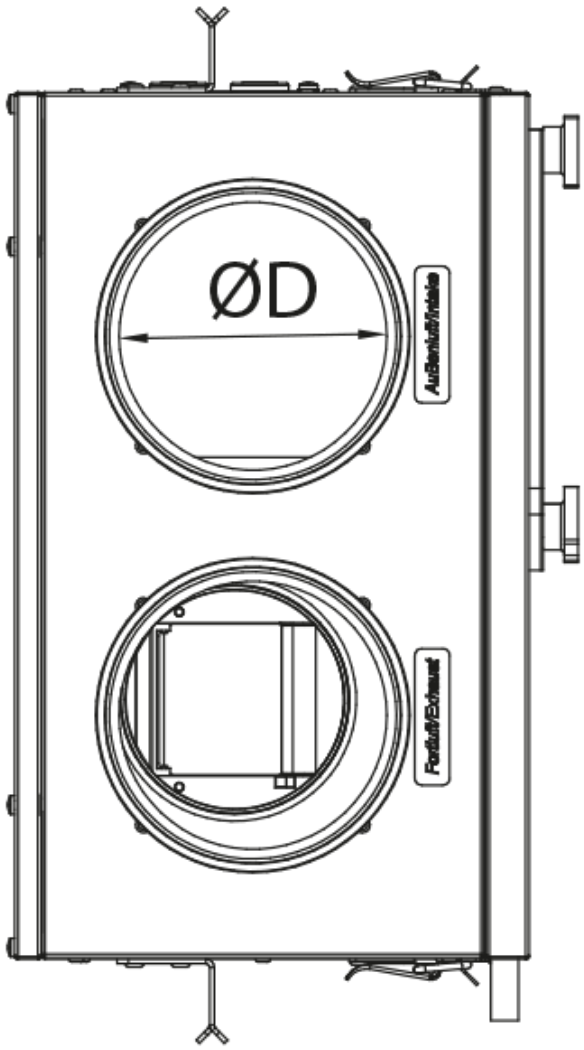

Accessories

For round ducts

Name	Photo	Description
SR 125/600		Silencers made of galvanized steel filled with non-combustible sound-absorbing material
SR 125/900		Silencers made of galvanized steel filled with non-combustible sound-absorbing material
SR 125/1200		Silencers made of galvanized steel filled with non-combustible sound-absorbing material

For round ducts

Name	Photo	Description

KOM 125		Backdraught damper with spring-loaded plates for shutting off air flow in round air ducts
KR 125		Air dampers for controlling air flow in round air ducts

Fittings

Name	Photo	Description
C 125		The clamps are designed for quick and reliable mounting and connection of various round ventilation system components. Clamps are made of stainless steel band

Ecodesign

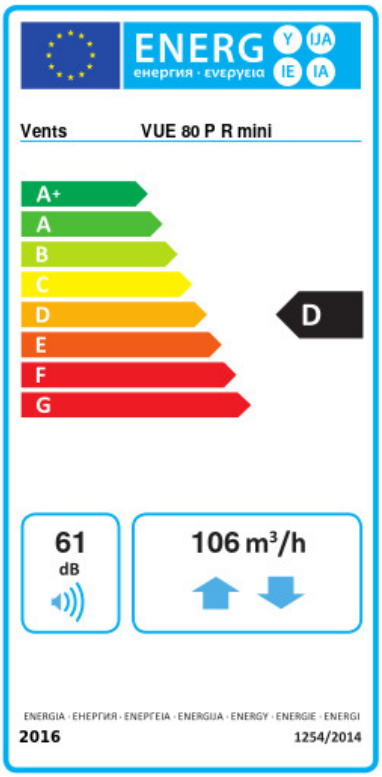

Trademark	Vents					
Model	VUE 80 P R mini					
Specific energy consumption (SEC) (kWh/(m²/a))	Cold		Average		Warm	
	-54.1	A+	-22.3	D	-1.5	F
Type of ventilation unit	Bidirectional					
Type of drive installed	Multi-speed					
Type of heat recovery system	Recuperative					
Thermal efficiency of heat recovery (%)	68					
Maximum flow rate (m³/h)	106					
Electric power input (W)	56					
Reference flow rate (m³/s)	0.021					
Reference pressure difference (Pa)	50					
Specific power input (SPI) (W/(m³/h))	0.512					
Control typology	Manual control					
Maximum internal leakage rates (%)	2.7					
Maximum external leakage rates (%)	2.7					
Sound power level (dB(A))	61					
Declared typology	RVU BVU					
The annual electricity consumption (AEC) (kWh/a)	Cold		Average		Warm	
	1224		687		642	
The annual heating saved (AHS) (kWh/a)	Cold		Average		Warm	
	7592		3881		1755	