# VUER 601 V EC L A21

Vertical air handling units with a sorption rotary heat exchanger



- Sound pressure level LpA at 3 m: 29
- Heat exchanger type: Sorption rotary
- Supply filter: G4 / Coarse > 60% (option F7 / ePM1 60%)
- Extract filter: G4 / Coarse > 60%
- Sound-insulated casing
- BMS protocol: ModBus
- Control: Smartphone
- Casing material: Coated steel
- Humidity sensor: Optional
- CO2 sensor: Optional
- PM2.5 sensor: Optional

| | Unit of measurement | VUER 601 V EC L A21 |
|---|---|---|
| Connected air duct size | mm | 200 |
| Phases | - | 1 |
| Minimum supply voltage | V | 230 |
| Maximum supply voltage | V | 230 |
| Power supply frequency | Hz | 50/60 |
| Rated power | W | 336 |
| Unit current | A | 2.3 |
| Maximum airflow | m³/h | 747 |
| Sound pressure level LpA at 3 m | dB(A) | 29 |
| Heat recovery efficiency, max | % | 86 |
| Heat exchanger type | - | Sorption rotary |
| Weight | kg | 90 |
| Supply filter | - | G4 / Coarse > 60% (option F7 / ePM1 60%) |
| Extract filter | - | G4 / Coarse > 60% |
| Transported air temperature (max) | °C | 40 |
| Transported air temperature (min) | °C | -25 |
| Ambient air temperature min | °C | 1 |
| Ambient air temperature max | °C | 40 |
| Ingress protection rating | - | IP22 |
| Ambient air humidity max | % | 60 |

| | | |
|---|---|---|
| Ingress protection rating of the drive | - | IP44 |

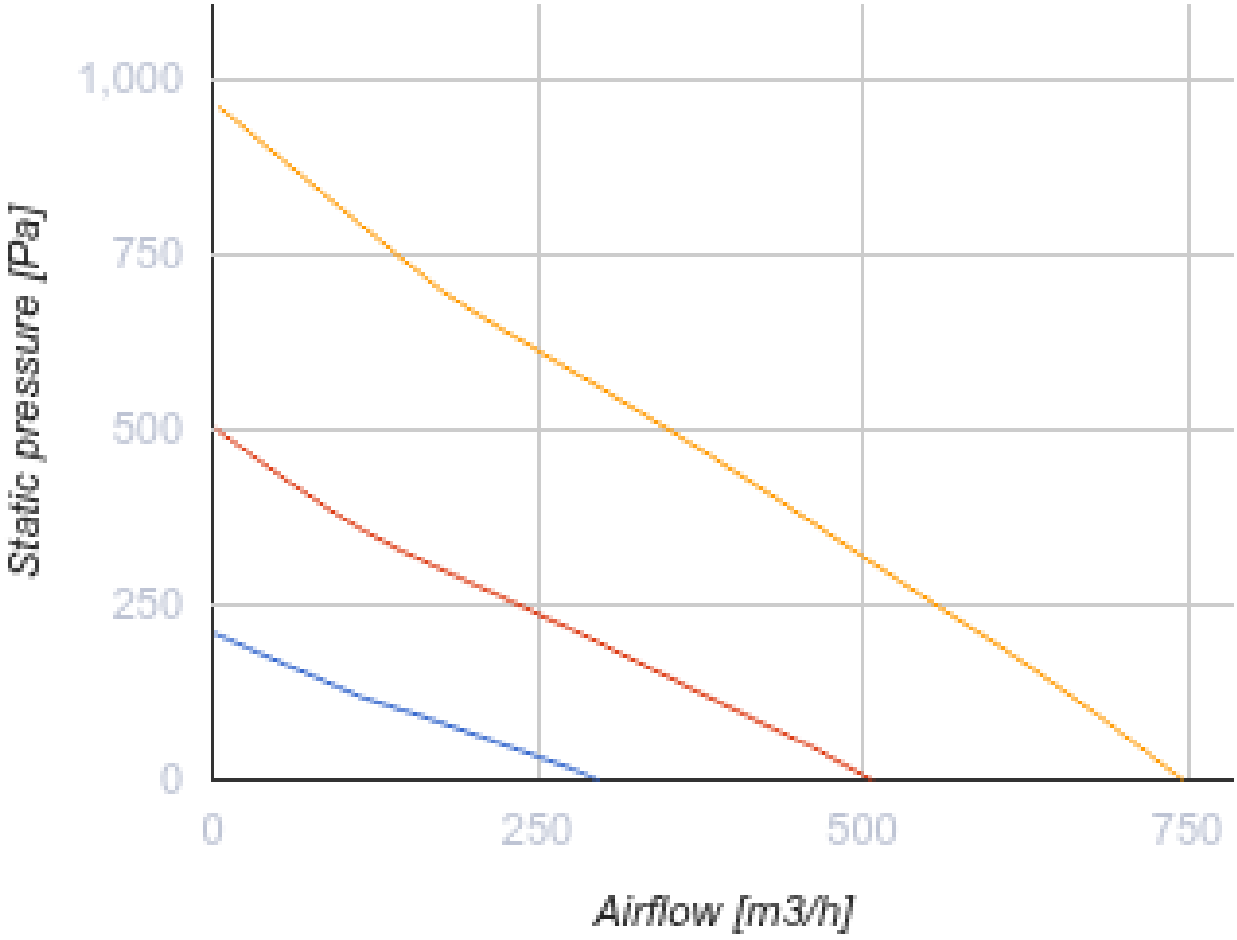


## Dimensions

| H | W | L | H1 | W1 | W2 | W3 | L1 | L2 | D | D1 |
|---|---|---|---|---|---|---|---|---|---|---|
| 750 | 900 | 609 | 828 | 427 | 192 | 140 | 248 | 167 | 200 | 125 |

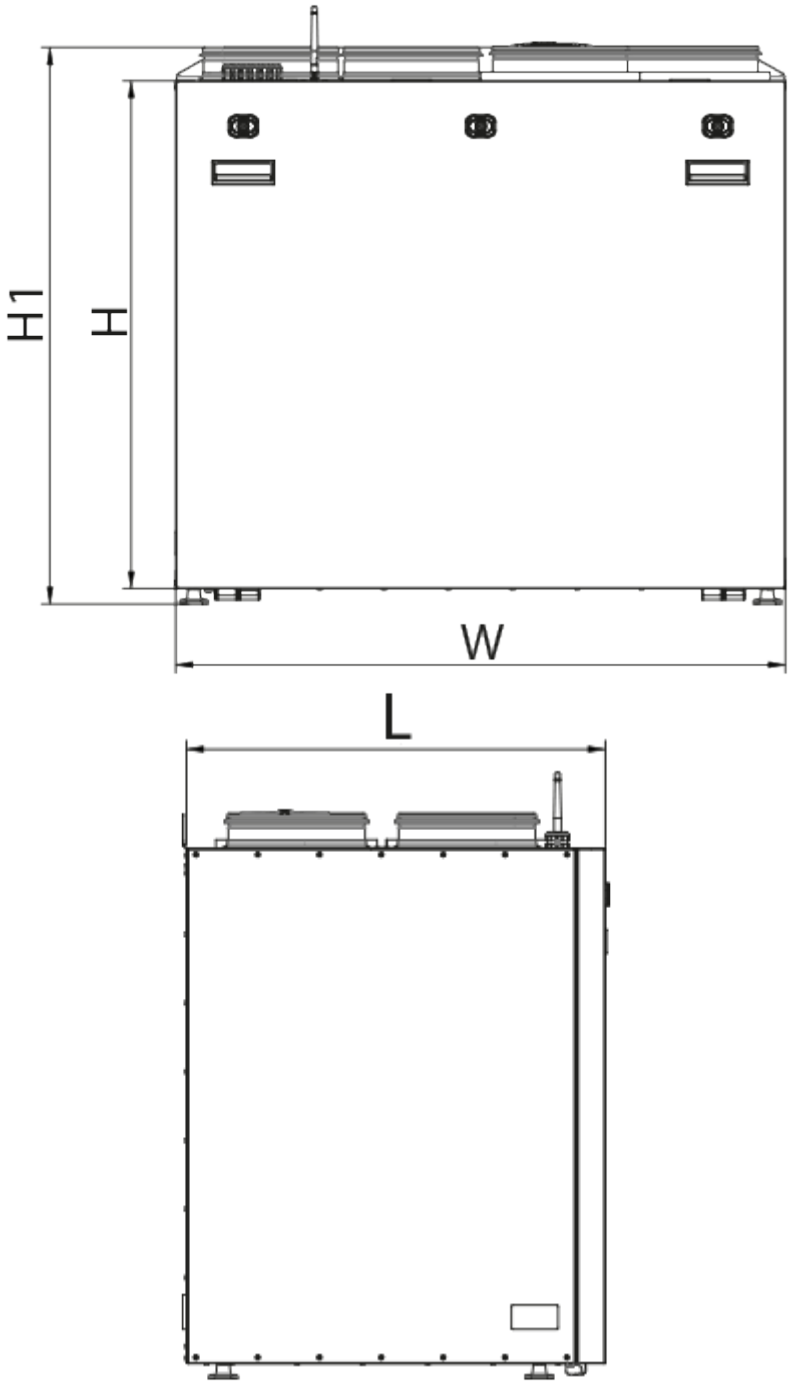
H1
H
W
L

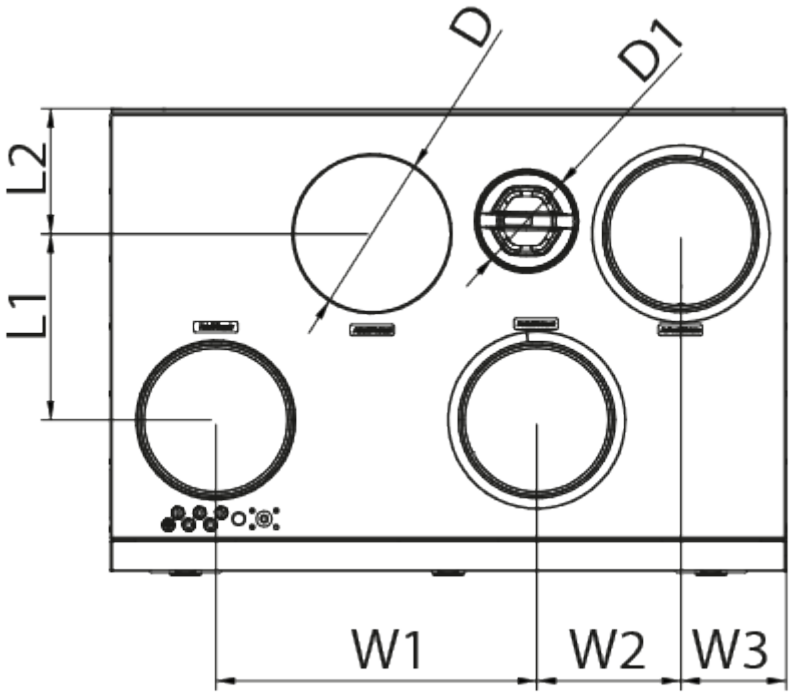


## Accessories

### Control Panels for AHU

| Name | Photo | Description |
|---|---|---|
| A25 |  | Touch screen control panel for controlling industrial and residential air handling units |
| A22 |  | Control panels for controlling industrial and residential air handling units |
| A22 WiFi |  | Control panels for controlling industrial and residential air handling units |

### Sensors

| Name | Photo | Description |
|---|---|---|
| HV2 |  | Humidity sensor |
| CO2-1 |  | CO2 sensors |
| HR-S |  | Electro-mechanical humidistat |

| | | |
|---|---|---|
| CO2-3 |  | CO2 sensor |

### For round ducts

| Name | Photo | Description |
|---|---|---|
| SR 200/600 |  | Silencers made of galvanized steel filled with non-combustible sound-absorbing material |
| SR 200/900 |  | Silencers made of galvanized steel filled with non-combustible sound-absorbing material |
| SR 200/1200 |  | Silencers made of galvanized steel filled with non-combustible sound-absorbing material |

### For round ducts

| Name | Photo | Description |
|---|---|---|
| KRV 200 |  | Air dampers for automatic air flow control in round ducts |

### Electric actuators

| Name | Photo | Description |
|---|---|---|
| Belimo TF230 |  | The actuators are designed for controlling air dampers with cross section up to 0.4 m² performing protection functions |

### Other accessories

| Name | Photo | Description |
|---|---|---|
| SF 522x240x48 Coarse 90% G4 |  | Panel filter G4 |
| SF 522x240x40 ePM1 60% F7 |  | F7 panel filter |

## Ecodesign

| Trademark | Vents | | | | | |
|---|---|---|---|---|---|---|
| Model | VUER 601 V EC L A21 | | | | | |
| Specific energy consumption (SEC) (kWh/(m²/a)) | Cold | | Average | | Warm | |
| | -85.8 | A+ | -42.3 | A+ | -17.4 | E |
| Type of ventilation unit | Bidirectional | | | | | |
| Type of drive installed | Variable speed | | | | | |
| Type of heat recovery system | Regenerative | | | | | |
| Thermal efficiency of heat recovery (%) | 83 | | | | | |
| Maximum flow rate (m³/h) | 675 | | | | | |
| Electric power input (W) | 304 | | | | | |
| Reference flow rate (m³/s) | 0.128 | | | | | |
| Reference pressure difference (Pa) | 50 | | | | | |
| Specific power input (SPI) (W/(m³/h)) | 0.24 | | | | | |
| Control typology | Local demand control | | | | | |
| Maximum internal leakage rates (%) | 2.7 | | | | | |
| Maximum external leakage rates (%) | 2.7 | | | | | |
| Sound power level (dB(A)) | 50 | | | | | |
| The annual electricity consumption (AEC) (kWh/a) | Cold | | Average | | Warm | |
| | 127 | | 127 | | 127 | |
| The annual heating saved (AHS) (kWh/a) | Cold | | Average | | Warm | |
| | 8898 | | 4548 | | 2057 | |