VUT 1000 H



Horizontal air handling units with a crossflow heat exchanger

- Sound pressure level LpA at 3 m: 60
- Heat exchanger type: Plate counterflow
- Heat exchanger material: Profiled polystyrene plates
- Supply filter: G4
- Extract filter: G4
- Sound-insulated casing
- Control: Remote Control
- Casing material: Galvanized steel

	Unit of measurement	VUT 1000 H
Connected air duct size	mm	249
Phases	-	1
Minimum supply voltage	V	230
Maximum supply voltage	V	230
Power supply frequency	Hz	50/60
Rated power	W	820
Unit current	A	3.6
Maximum airflow	m^3/h	1200
Rotation speed at 50hz	-	1850
Sound pressure level LpA at 3 m	dB(A)	60
Heat recovery efficiency, max	%	88
Heat exchanger type	-	Plate counterflow
Heat exchanger material	-	Profiled polystyrene plates
Weight	kg	88
Supply filter	-	G4
Extract filter	-	G4
Transported air temperature (max)	°C	40
Transported air temperature (min)	°C	-25
Ambient air temperature min	°C	10
Ambient air temperature max	°C	50
Ingress protection rating	-	IP22

Ambient air humidity max	%	80
Ingress protection rating of the drive	-	IP44

Dimensions

ØD	B	B1	B2	B3	H	H1	H2	L	L1
248	548	496	60	213	794	290	200	802	850

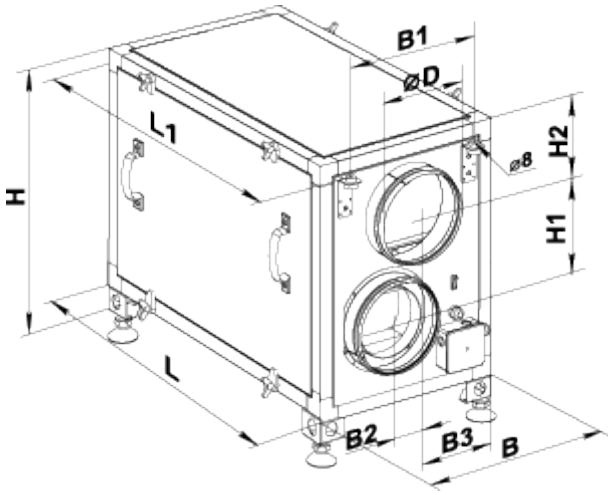

Accessories

For round ducts

Name	Photo	Description
SR 250/600		Silencers made of galvanized steel filled with non-combustible sound-absorbing material
SR 250/900		Silencers made of galvanized steel filled with non-combustible sound-absorbing material
SR 250/1200		Silencers made of galvanized steel filled with non-combustible sound-absorbing material
SRF 250/600		Silencers made of aluminium alloy filled with non-combustible sound-absorbing material
SRF 250/900		Silencers made of aluminium alloy filled with non-combustible sound-absorbing material
SRF 250/2000		Silencers made of aluminium alloy filled with non-combustible sound-absorbing material

For round ducts

Name	Photo	Description
KOM 250		Backdraught damper with spring-loaded plates for shutting off air flow in round air ducts
KR 250		Air dampers for controlling air flow in round air ducts

Other accessories

Name	Photo	Description
SF 450x295x48 G4		Panel filter G4
VL C4 300/450	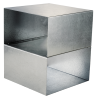	Summer block

Ecodesign

Trademark	Vents
Model	VUT 1000 H
Type of drive installed	Integrated MSD
Type of heat recovery system	Recuperative
Thermal efficiency of heat recovery (%)	68
Nominal external pressure (Pa)	375
Maximum internal leakage rates (%)	2.7
Maximum external leakage rates (%)	2.7
Static efficiency (%)	22.3
Visual filter warning	See control panel catalogue data
Declared typology	NRVU BVU
Effective electric power input (kW)	0.769
Face velocity at design flow rate (m/s)	1.352
Energy performance of filters	B
Sound power level (dB(A))	80