VUT 1500 WH-4 R



Horizontal air handling units with a crossflow heat exchanger

- Sound pressure level LpA at 3 m: 49
- Heat exchanger type: Plate counterflow
- Heat exchanger material: Profiled polystyrene plates
- Supply filter: G4
- Extract filter: G4
- Sound-insulated casing
- Reheater: Water
- Control: Remote Control
- Casing material: Galvanized steel

	Unit of measurement	VUT 1500 WH-4 R
Connected air duct size	mm	315
Phases	-	1
Minimum supply voltage	V	230
Maximum supply voltage	V	230
Power supply frequency	Hz	50/60
Rated power	W	980
Unit current	A	4.3
Maximum airflow	m³/h	1700
Rotation speed at 50hz	-	1100
Sound pressure level LpA at 3 m	dB(A)	49
Heat recovery efficiency, max	%	77
Heat exchanger type	-	Plate counterflow
Heat exchanger material	-	Profiled polystyrene plates
Weight	kg	88
Supply filter	-	G4
Extract filter	-	G4
Transported air temperature (max)	°C	40
Transported air temperature (min)	°C	-25
Ambient air temperature min	°C	1
Ambient air temperature max	°C	40
Ingress protection rating	-	IP22

Ambient air humidity max	%	80
Ingress protection rating of the drive	-	IP44

Dimensions

ØD	B	B1	B2	B3	H	H1	H2	H3	L	L1	L2
314	842	581	320	520	814	947	201	595	1345	1388	1445

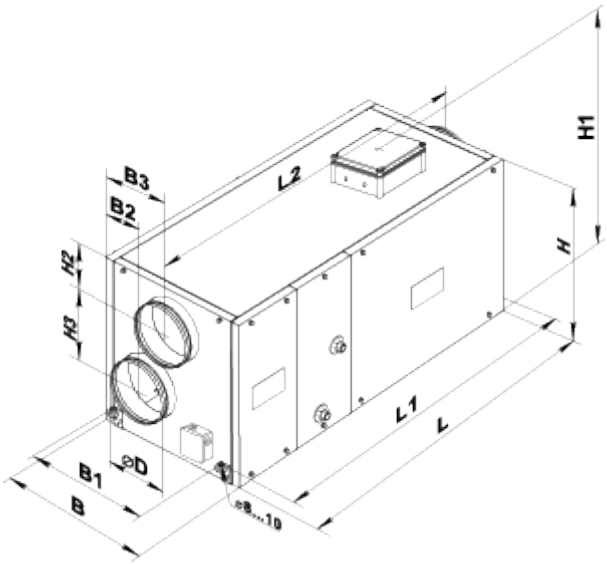

Accessories

For round ducts

Name	Photo	Description
SR 250/600		Silencers made of galvanized steel filled with non-combustible sound-absorbing material
SR 250/900		Silencers made of galvanized steel filled with non-combustible sound-absorbing material
SR 250/1200		Silencers made of galvanized steel filled with non-combustible sound-absorbing material
SRF 250/600		Silencers made of aluminium alloy filled with non-combustible sound-absorbing material
SRF 250/900		Silencers made of aluminium alloy filled with non-combustible sound-absorbing material

SRF 250/2000		Silencers made of aluminium alloy filled with non-combustible sound-absorbing material

For round ducts

Name	Photo	Description
KOM 250		Backdraught damper with spring-loaded plates for shutting off air flow in round air ducts
KR 250		Air dampers for controlling air flow in round air ducts

Other accessories

Name	Photo	Description
SF 550x253x48 G4		Panel filter G4
VL C4 300/300	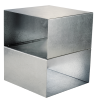	Summer block