VUT 500 EH



Horizontal air handling units with a crossflow heat exchanger

- Power of electrical reheater: 3000
- Sound pressure level LpA at 3 m: 47
- Heat exchanger type: Plate counterflow
- Heat exchanger material: Profiled polystyrene plates
- Supply filter: G4
- Extract filter: G4
- Sound-insulated casing
- Reheater: Electric
- Control: Remote Control
- Casing material: Galvanized steel

	Unit of measurement	VUT 500 EH
Connected air duct size	mm	249
Phases	-	1
Maximum supply voltage	V	230
Minimum supply voltage	V	230
Power supply frequency	Hz	50/60
Rated power	W	300
Power of electrical reheater	W	3000
Unit current	A	14.3
Maximum airflow	m³/h	500
Rotation speed at 50hz	-	1100
Sound pressure level LpA at 3 m	dB(A)	47
Heat recovery efficiency, max	%	88
Heat exchanger type	-	Plate counterflow
Heat exchanger material	-	Profiled polystyrene plates
Weight	kg	49
Supply filter	-	G4
Extract filter	-	G4
Transported air temperature (max)	°C	40
Transported air temperature (min)	°C	-25
Ambient air temperature min	°C	1
Ambient air temperature max	°C	40

Ingress protection rating	-	IP22
Ambient air humidity max	%	80
Ingress protection rating of the drive	-	IP44

Dimensions

ØD	B	B1	B2	B3	H	H2	H3	L	L1	L2
149	497	403	248	348	554	111	230	954	996	1054

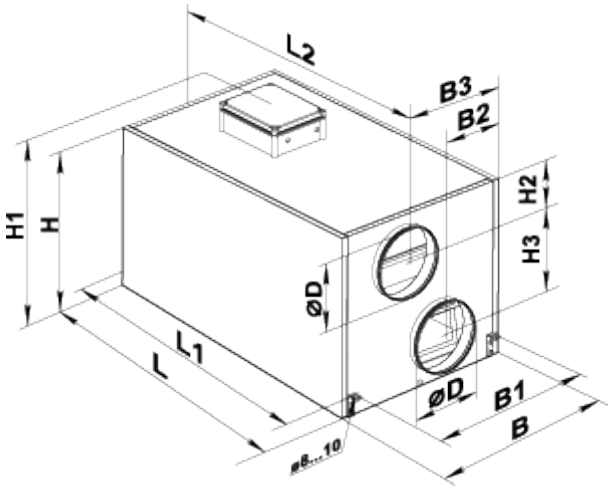

Accessories

For round ducts

Name	Photo	Description
SR 150/600		Silencers made of galvanized steel filled with non-combustible sound-absorbing material
SR 150/900		Silencers made of galvanized steel filled with non-combustible sound-absorbing material
SR 150/1200		Silencers made of galvanized steel filled with non-combustible sound-absorbing material
SRF 150/600		Silencers made of aluminium alloy filled with non-combustible sound-absorbing material
SRF 150/900		Silencers made of aluminium alloy filled with non-combustible sound-absorbing material

SRF 150/2000		Silencers made of aluminium alloy filled with non-combustible sound-absorbing material

For round ducts

Name	Photo	Description
KOM 150		Backdraught damper with spring-loaded plates for shutting off air flow in round air ducts
KR 150		Air dampers for controlling air flow in round air ducts

Other accessories

Name	Photo	Description
SF 438x215x48 G4		Panel filter G4
VL C4 300/300	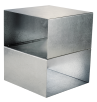	Summer block

Ecodesign

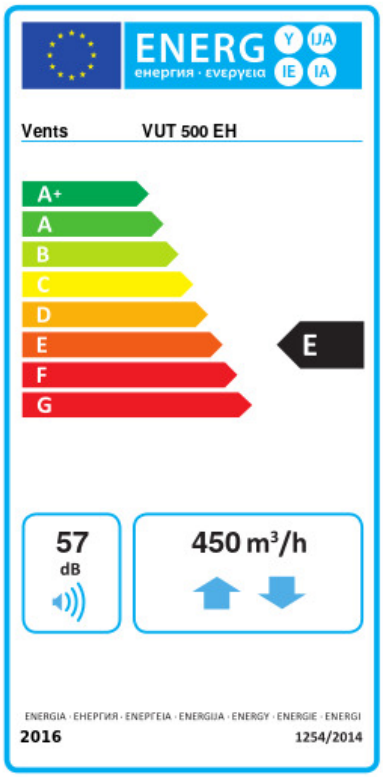

Trademark	Vents					
Model	VUT 500 EH					
Specific energy consumption (SEC) (kWh/(m²/a))	Cold		Average		Warm	
	-47.3	A+	-17.1	E	2.9	G
Type of ventilation unit	Bidirectional					
Type of drive installed	Multi-speed					
Type of heat recovery system	Recuperative					
Thermal efficiency of heat recovery (%)	63					
Maximum flow rate (m³/h)	450					
Electric power input (W)	300					
Reference flow rate (m³/s)	0.088					
Reference pressure difference (Pa)	50					
Specific power input (SPI) (W/(m³/h))	0.629					
Control typology	Manual control					
Maximum internal leakage rates (%)	2.7					
Maximum external leakage rates (%)	2.7					
Declared typology	RVU BVU					
Sound power level (dB(A))	57					
The annual electricity consumption (AEC) (kWh/a)	Cold		Average		Warm	
	1369		832		787	
The annual heating saved (AHS) (kWh/a)	Cold		Average		Warm	
	7281		3722		1683	