VUT 900 PBE EC R A21 DTV



Suspended air handling units with a counterflow polystyrene or enthalpy heat exchanger

- Power of electrical reheater: 3300
- Sound pressure level LpA at 3 m: 33
- Heat exchanger type: Counter flow
- Heat exchanger material: Polystyrene
- Supply filter: G4 (F7 option)
- Extract filter: G4
- Sound-insulated casing
- Bypass: Auto
- Reheater: Electric
- Preheater: Optional
- BMS protocol: ModBus
- Control: Smartphone
- Casing material: Galvanized steel
- Humidity sensor: Optional
- CO2 sensor: Optional
- PM2.5 sensor: Optional

	Unit of measurement	VUT 900 PBE EC R A21 DTV
Connected air duct size	mm	250
Phases	-	1
Maximum supply voltage	V	230
Minimum supply voltage	V	230
Power supply frequency	Hz	50/60
Rated power	W	442
Power of electrical reheater	W	3300
Unit current	A	17.4
Maximum airflow	m³/h	1030
Rotation speed at 50hz	-	2720
Sound pressure level LpA at 3 m	dB(A)	33
Heat recovery efficiency, max	%	88
Heat exchanger type	-	Counter flow
Heat exchanger material	-	Polystyrene
Weight	kg	111
Supply filter	-	G4 (F7 option)
Extract filter	-	G4
Transported air temperature (max)	°C	40
Transported air temperature (min)	°C	-25

Ambient air temperature min	°C	1
Ambient air temperature max	°C	40
Ingress protection rating	-	IP22
Ambient air humidity max	%	60
Ingress protection rating of the drive	-	IP44

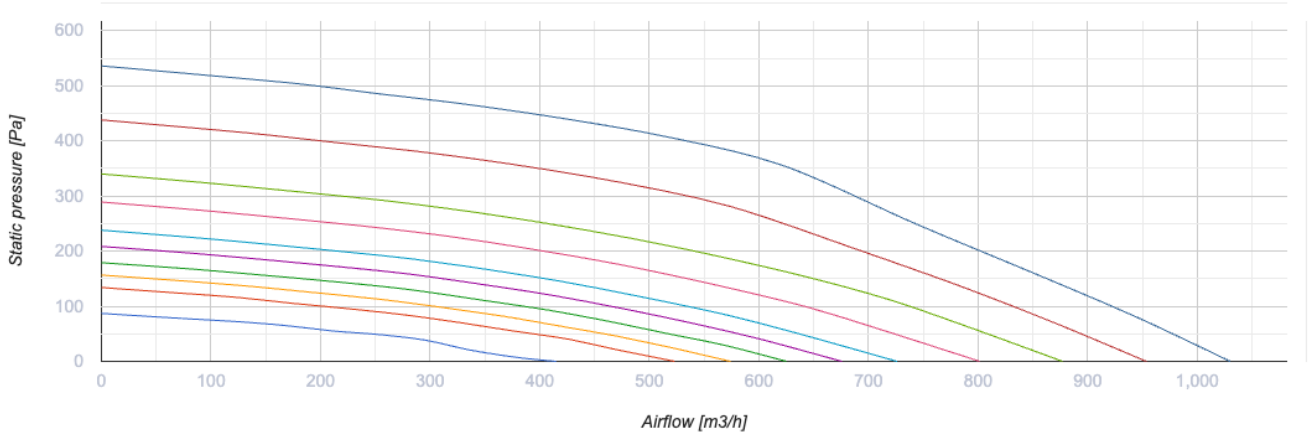

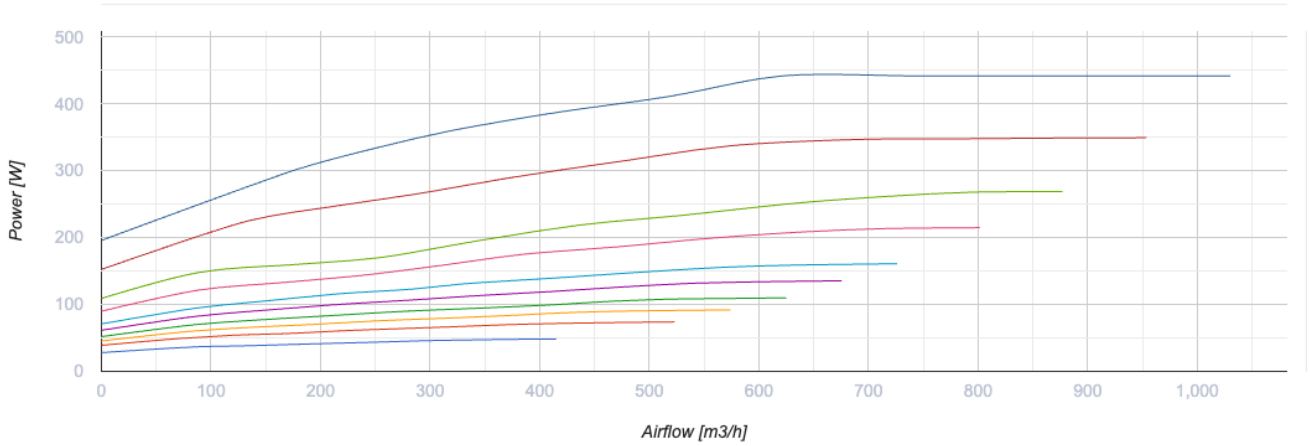

Dimensions

ØD	B	B1	H	L	L1
250	1351	1485	318	1349	1402

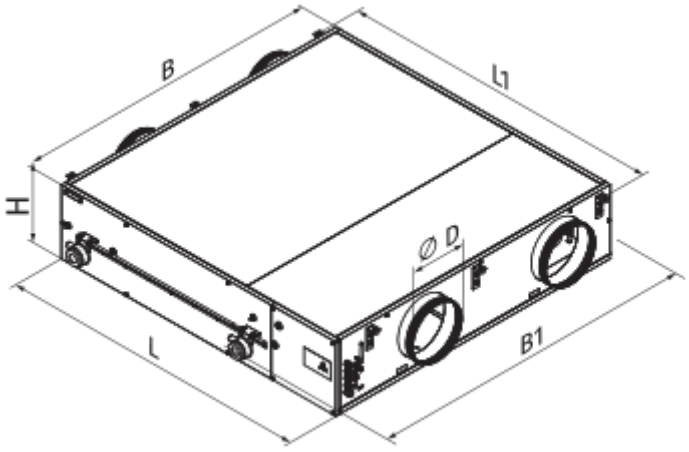

Accessories

Control Panels for AHU

Name	Photo	Description
A25		Touch screen control panel for controlling industrial and residential air handling units
A22		Control panels for controlling industrial and residential air handling units
A22 WiFi		Control panels for controlling industrial and residential air handling units

Sensors

Name	Photo	Description
HV2		Humidity sensor
CO2-1		CO2 sensors
CO2-2		CO2 sensors
HR-S		Electro-mechanical humidistat

Electrical heaters

Name	Photo	Description

NKP 250-1,2-1 A21 V.2		Inline heaters for heat exchanger frost protection
NKP 250-2,0-1 A21 V.2		Inline heaters for heat exchanger frost protection
NKP 250-3,0-1 A21 V.2		Inline heaters for heat exchanger frost protection

Condensation drainage

Name	Photo	Description
SH-32		Hydraulic U-trap to drain condensate from heat exchangers and coolers

For round ducts

Name	Photo	Description
SR 250/600		Silencers made of galvanized steel filled with non-combustible sound-absorbing material
SR 250/900		Silencers made of galvanized steel filled with non-combustible sound-absorbing material
SR 250/1200		Silencers made of galvanized steel filled with non-combustible sound-absorbing material

For round ducts

Name	Photo	Description
KOM 250		Backdraught damper with spring-loaded plates for shutting off air flow in round air ducts
KRV 250		Air dampers for automatic air flow control in round ducts

Electric actuators

Name	Photo	Description
Belimo TF230		The actuators are designed for controlling air dampers with cross section up to 0.4 m² performing protection functions

Other accessories

Name	Photo	Description
SF 647x274x20 G4		Panel filter G4
SFK 647x274x27 F7		F7 pocket filter
SFK 647x274x27 G4		G4 pocket filter

Ecodesign

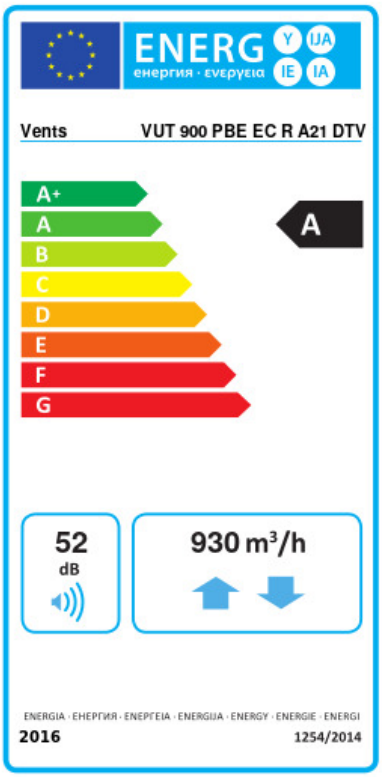

Trademark	Vents					
Model	VUT 900 PBE EC R A21 DTV					
Specific energy consumption (SEC) (kWh/(m²/a))	Cold		Average		Warm	
	-78.1	A+	-40.8	A	-16.7	E
Type of ventilation unit	Bidirectional					
Type of drive installed	Variable speed					
Type of heat recovery system	Recuperative					
Thermal efficiency of heat recovery (%)	79					
Maximum flow rate (m³/h)	930					
Electric power input (W)	442					
Reference flow rate (m³/s)	0.169					
Reference pressure difference (Pa)	50					
Specific power input (SPI) (W/(m³/h))	0.261					
Control typology	Local demand control					
Maximum internal leakage rates (%)	2.7					
Maximum external leakage rates (%)	2.7					
Declared typology	RVU BVU					
Sound power level (dB(A))	52					
The annual electricity consumption (AEC) (kWh/a)	Cold		Average		Warm	
	720		183		138	
The annual heating saved (AHS) (kWh/a)	Cold		Average		Warm	
	8736		4466		2019	