VUTR 200 V6EK EC



Air handling units in a heat- and sound-insulated casing

- Power of electrical reheater: 700
- Sound pressure level LpA at 3 m: 28
- Heat exchanger type: Rotary
- Heat exchanger material: Aluminum
- Supply filter: G4, F7
- Extract filter: G4
- Sound-insulated casing
- Reheater: Electric
- BMS protocol: ModBus
- Casing material: Steel
- Humidity sensor: Optional
- CO2 sensor: Optional

	Unit of measurement	VUTR 200 V6EK EC
Connected air duct size	mm	125
Phases	-	1
Minimum supply voltage	V	230
Maximum supply voltage	V	230
Power supply frequency	Hz	50/60
Rated power	W	118
Power of electrical reheater	W	700
Unit current	A	4
Maximum airflow	m³/h	270
Sound pressure level LpA at 3 m	dB(A)	28
Heat recovery efficiency, max	%	92
Heat exchanger type	-	Rotary
Heat exchanger material	-	Aluminum
Weight	kg	48
Supply filter	-	G4, F7
Extract filter	-	G4
Transported air temperature (max)	°C	40
Transported air temperature (min)	°C	-25

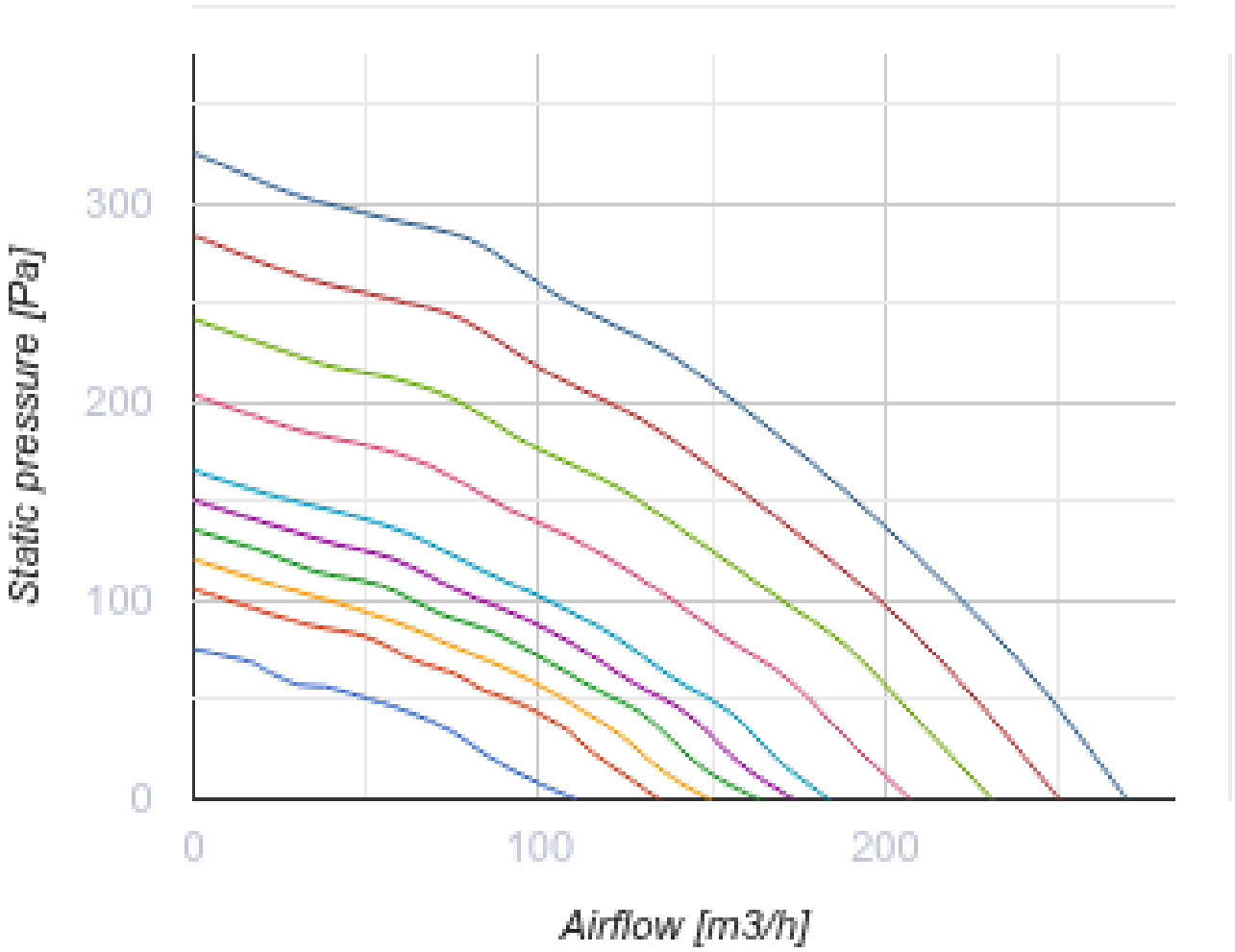
Static pressure [Pa]
300
200
100
0
0
100
200
Airflow [m3/h]

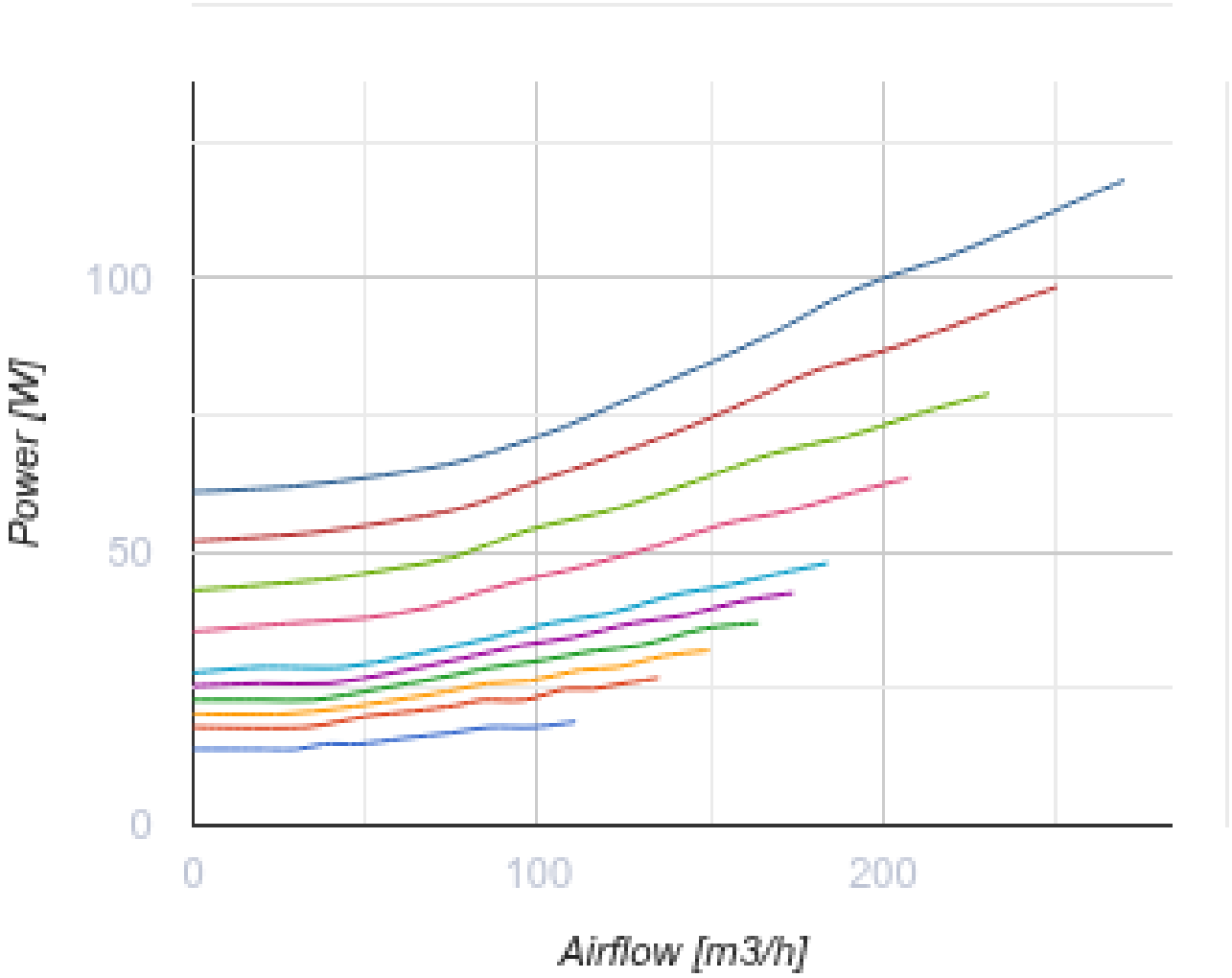

Dimensions

ØD	B	B1	H	H1	L
125	348	371	791	865	598

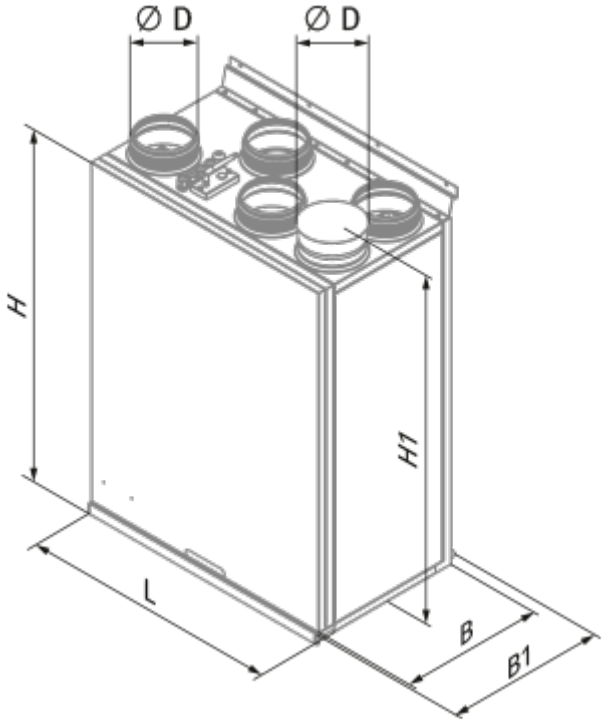

Accessories

Control Panels for AHU

Name	Photo	Description
A25		Touch screen control panel for controlling industrial and residential air handling units
A22		Control panels for controlling industrial and residential air handling units
A22 WiFi		Control panels for controlling industrial and residential air handling units

Sensors

Name	Photo	Description
HV2		Humidity sensor
CO2-1		CO2 sensors
CO2-2		CO2 sensors

HR-S		Electro-mechanical humidistat
DPWC11200		Humidity sensor

VOC sensors

Name	Photo	Description
DPWQ30600		VOC sensors

CO2 sensors

Name	Photo	Description
DPWQ40200		CO2 sensor

For round ducts

Name	Photo	Description
SR 125/600		Silencers made of galvanized steel filled with non-combustible sound-absorbing material
SR 125/900		Silencers made of galvanized steel filled with non-combustible sound-absorbing material
SR 125/1200		Silencers made of galvanized steel filled with non-combustible sound-absorbing material
SRF 125/600		Silencers made of aluminium alloy filled with non-combustible sound-absorbing material
SRF 125/900		Silencers made of aluminium alloy filled with non-combustible sound-absorbing material
SRF 125/2000		Silencers made of aluminium alloy filled with non-combustible sound-absorbing material

For round ducts

Name	Photo	Description
KOM 125		Backdraught damper with spring-loaded plates for shutting off air flow in round air ducts

KRV 125		Air dampers for automatic air flow control in round ducts

Electric actuators

Name	Photo	Description
Belimo TF230		The actuators are designed for controlling air dampers with cross section up to 0.4 m² performing protection functions

Electric actuators

Name	Photo	Description
Belimo LF230		The Belimo LF series actuators are designed for controlling air dampers with cross section up to 0.8 m² performing protection functions

Other accessories

Name	Photo	Description
SF 284x103x60 G4		Panel filter G4
SF 284x103x60 F7		F7 panel filter

Fittings

Name	Photo	Description
C 125		The clamps are designed for quick and reliable mounting and connection of various round ventilation system components. Clamps are made of stainless steel band