VUTR 250 P2E EC L A21



Suspended air handling units with a sorption rotary heat exchanger

- Power of electrical reheater: 700
- Sound pressure level LpA at 3 m: 23
- Heat exchanger type: Rotary
- Heat exchanger material: Profiled polystyrene plates
- Supply filter: G4, F7 (H13 option)
- Extract filter: G4
- Sound-insulated casing
- Reheater: Electric
- BMS protocol: ModBus
- Control: Smartphone
- Casing material: Galvanized steel
- Humidity sensor: Optional
- CO2 sensor: Optional
- PM2.5 sensor: Optional

	Unit of measurement	VUTR 250 P2E EC L A21
Connected air duct size	mm	160
Phases	-	1
Minimum supply voltage	V	230
Maximum supply voltage	V	230
Power supply frequency	Hz	50/60
Rated power	W	128
Power of electrical reheater	W	700
Unit current	A	4
Maximum airflow	m^3/h	300
Rotation speed at 50hz	-	2200
Sound pressure level LpA at 3 m	dB(A)	23
Heat recovery efficiency, max	%	87
Heat exchanger type	-	Rotary
Heat exchanger material	-	Profiled polystyrene plates
Weight	kg	54
Supply filter	-	G4, F7 (H13 option)
Extract filter	-	G4
Transported air temperature (max)	°C	40
Transported air temperature (min)	°C	-25

Ambient air temperature min	°C	1
Ambient air temperature max	°C	40
Ingress protection rating	-	IP22
Ambient air humidity max	%	80
Ingress protection rating of the drive	-	IP44

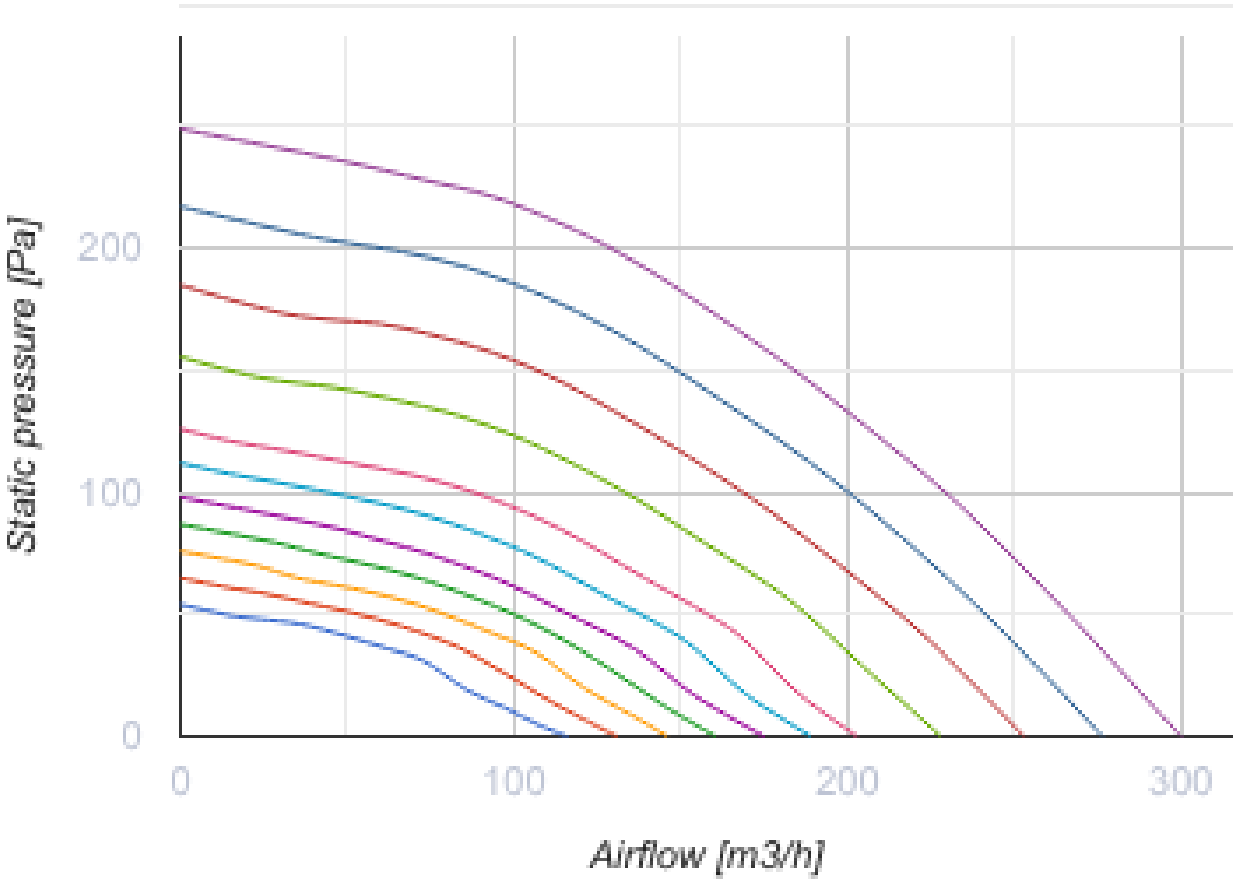

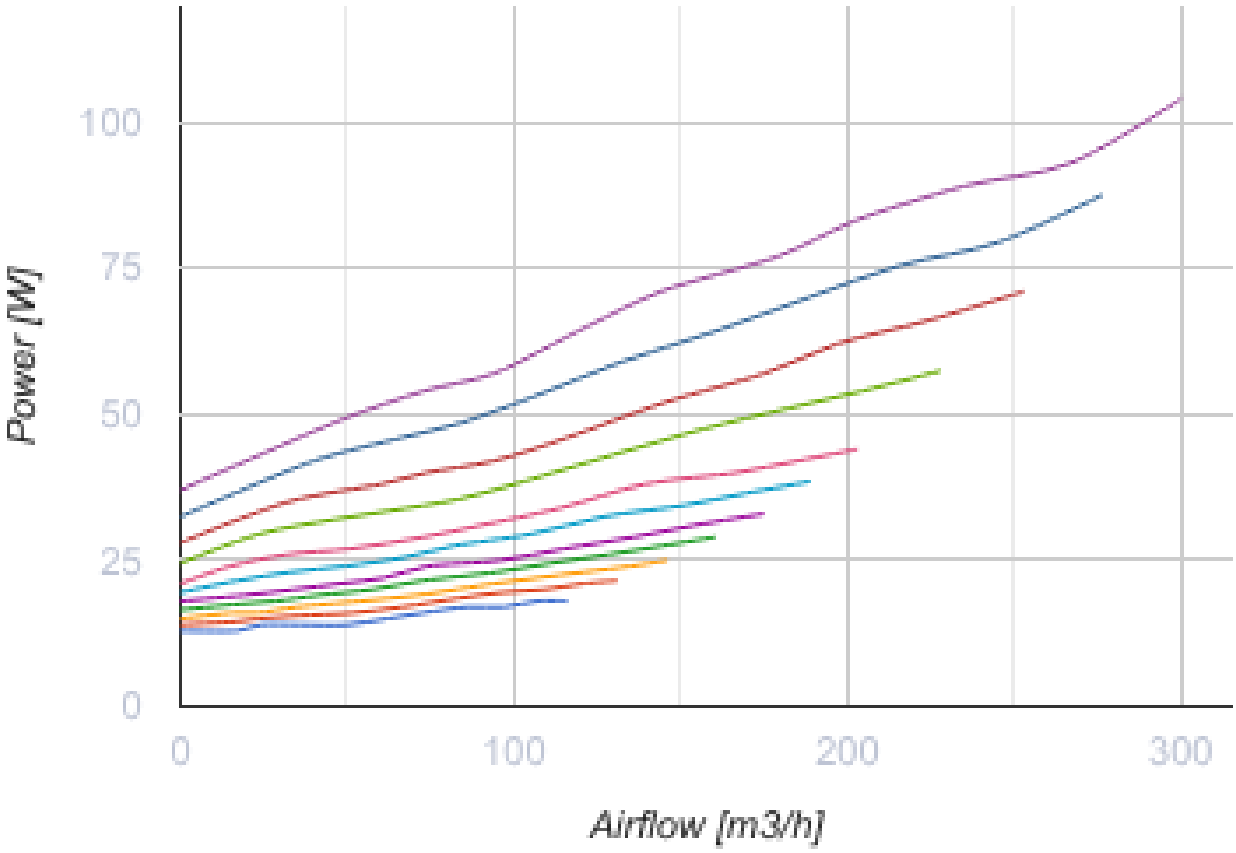

Dimensions

ØD	ØD1	B	H	L	L1
160	125	666	245	1002	1097

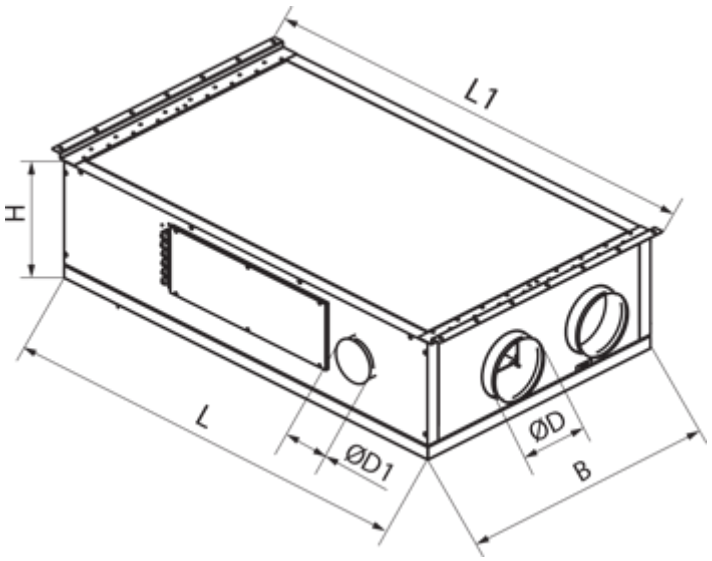

Accessories

Control Panels for AHU

Name	Photo	Description
A25		Touch screen control panel for controlling industrial and residential air handling units
A22		Control panels for controlling industrial and residential air handling units
A22 WiFi		Control panels for controlling industrial and residential air handling units

Sensors

Name	Photo	Description
HV2		Humidity sensor
HR-S		Electro-mechanical humidistat

Cooker Hoods

Name	Photo	Description
KH-1	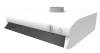	Kitchen hood for removing combustion products, vapors and odors from the air

For round ducts

Name	Photo	Description
KOM 160		Backdraught damper with spring-loaded plates for shutting off air flow in round air ducts
KRV 160		Air dampers for automatic air flow control in round ducts

Electric actuators

Name	Photo	Description

Belimo TF230		The actuators are designed for controlling air dampers with cross section up to 0.4 m² performing protection functions

Other accessories

Name	Photo	Description
SF 280x180x48 G4		Panel filter G4
SF 280x180x48 F7		F7 panel filter