VUTR 601 V EC R A21



Vertical air handling units with a sorption rotary heat exchanger

- Sound pressure level LpA at 3 m: 29
- Heat exchanger type: Condensation rotary
- Supply filter: G4 / Coarse > 60% (option F7 / ePM1 60%)
- Extract filter: G4 / Coarse > 60%
- Sound-insulated casing
- BMS protocol: ModBus
- Control: Smartphone
- Casing material: Coated steel
- Humidity sensor: Optional
- CO2 sensor: Optional
- PM2.5 sensor: Optional

	Unit of measurement	VUTR 601 V EC R A21
Connected air duct size	mm	200
Phases	-	1
Minimum supply voltage	V	230
Maximum supply voltage	V	230
Power supply frequency	Hz	50/60
Rated power	W	336
Unit current	A	2.3
Maximum airflow	m³/h	747
Sound pressure level LpA at 3 m	dB(A)	29
Heat recovery efficiency, max	%	87
Heat exchanger type	-	Condensation rotary
Weight	kg	90
Supply filter	-	G4 / Coarse > 60% (option F7 / ePM1 60%)
Extract filter	-	G4 / Coarse > 60%
Transported air temperature (max)	°C	40
Transported air temperature (min)	°C	-25
Ambient air temperature min	°C	1
Ambient air temperature max	°C	40
Ingress protection rating	-	IP22

Ambient air humidity max	%	60
Ingress protection rating of the drive	-	IP44

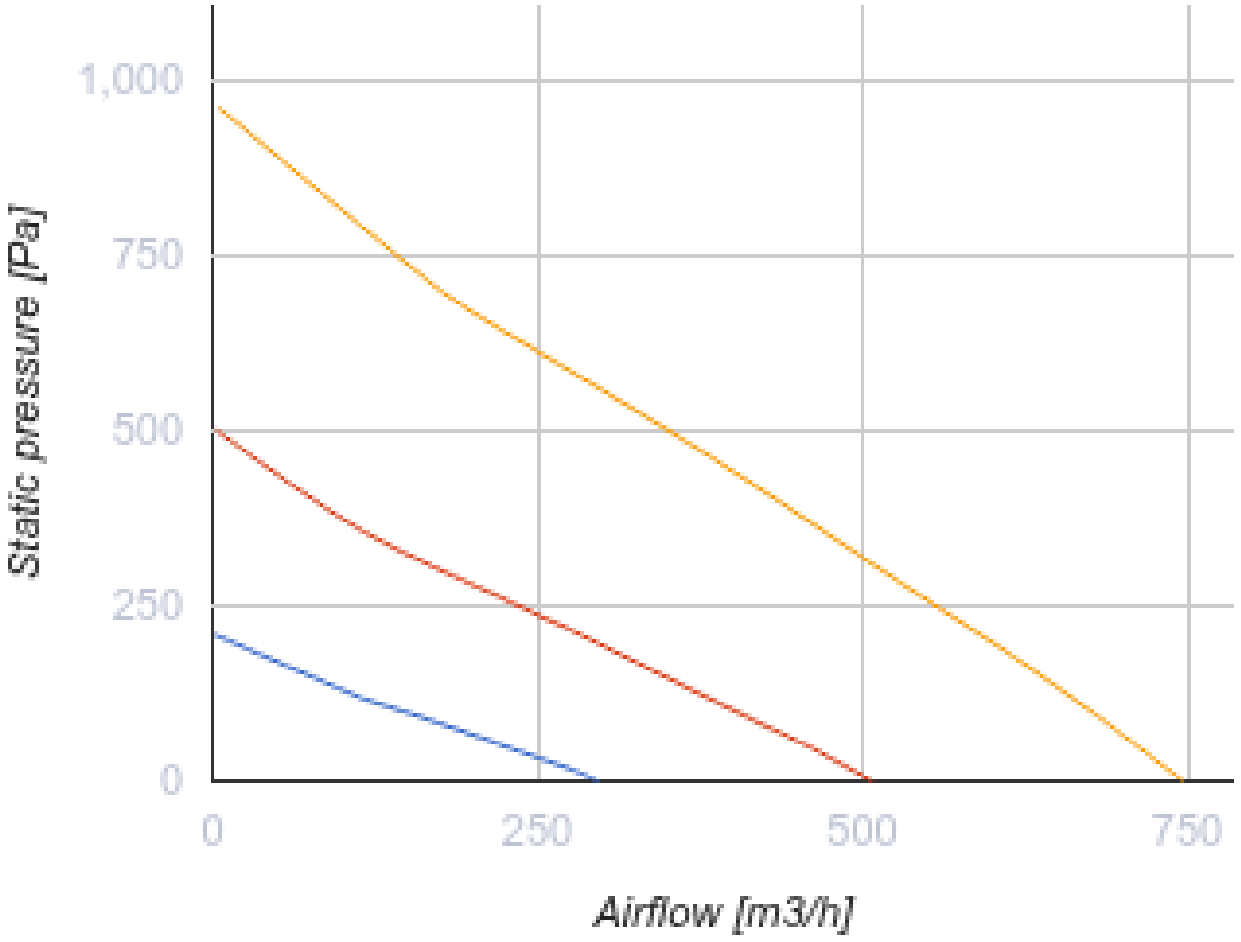

Dimensions

H	W	L	H1	W1	W2	W3	L1	L2	D	D1
750	900	609	828	427	192	140	248	167	200	125

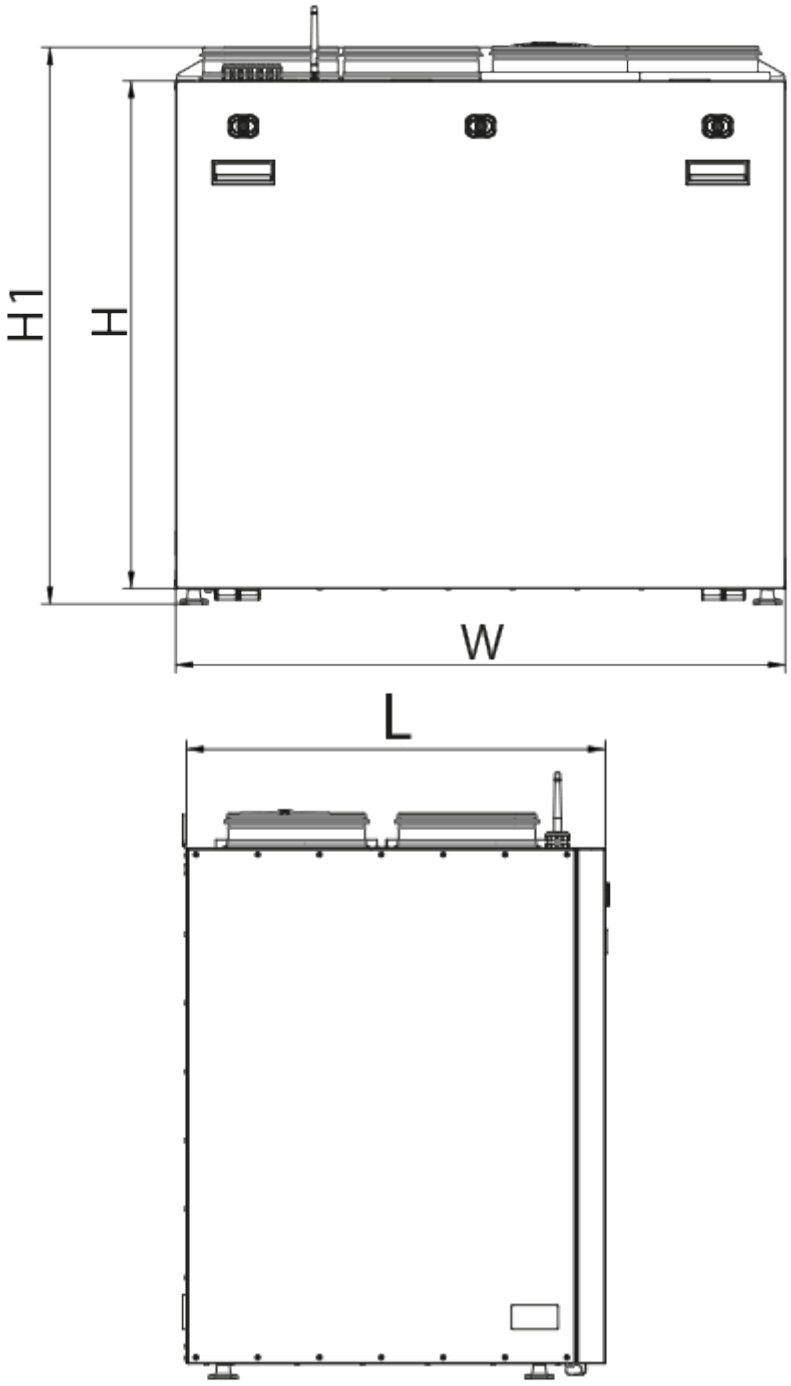
H1
H
W
L

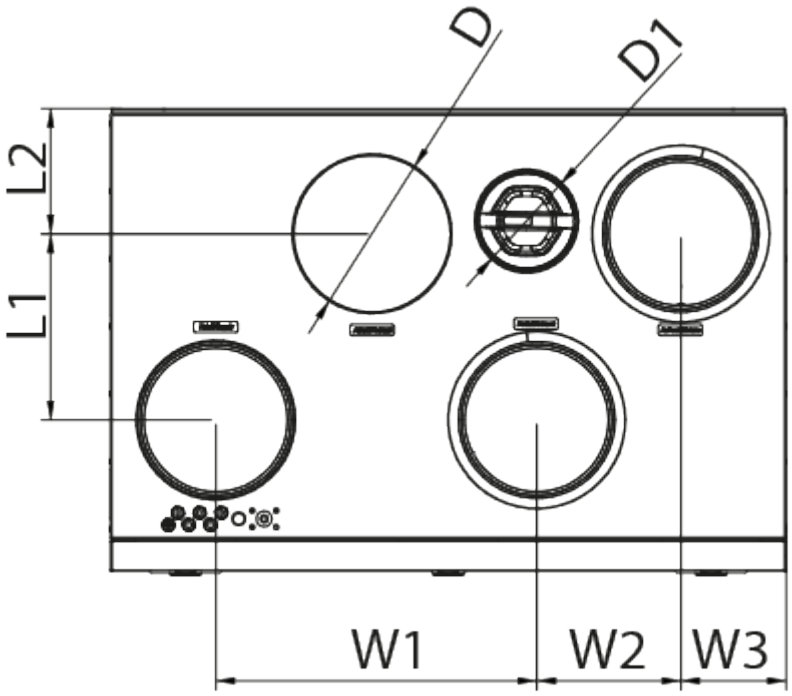

Accessories

Control Panels for AHU

Name	Photo	Description
A25		Touch screen control panel for controlling industrial and residential air handling units
A22		Control panels for controlling industrial and residential air handling units
A22 WiFi		Control panels for controlling industrial and residential air handling units

Sensors

Name	Photo	Description
HV2		Humidity sensor
CO2-1		CO2 sensors
HR-S		Electro-mechanical humidistat

CO2-3		CO2 sensor

For round ducts

Name	Photo	Description
SR 200/600		Silencers made of galvanized steel filled with non-combustible sound-absorbing material
SR 200/900		Silencers made of galvanized steel filled with non-combustible sound-absorbing material
SR 200/1200		Silencers made of galvanized steel filled with non-combustible sound-absorbing material

For round ducts

Name	Photo	Description
KRV 200		Air dampers for automatic air flow control in round ducts

Electric actuators

Name	Photo	Description
Belimo TF230		The actuators are designed for controlling air dampers with cross section up to 0.4 m² performing protection functions

Other accessories

Name	Photo	Description
SF 522x240x48 Coarse 90% G4		Panel filter G4
SF 522x240x40 ePM1 60% F7		F7 panel filter

Ecodesign

Trademark	Vents					
Model	VUTR 601 V EC R A21					
Specific energy consumption (SEC) (kWh/(m²/a))	Cold		Average		Warm	
	-86.2	A+	-42.5	A+	-17.5	E
Type of ventilation unit	Bidirectional					
Type of drive installed	Variable speed					
Type of heat recovery system	Regenerative					
Thermal efficiency of heat recovery (%)	84					
Maximum flow rate (m³/h)	675					
Electric power input (W)	304					
Reference flow rate (m³/s)	0.128					
Reference pressure difference (Pa)	50					
Specific power input (SPI) (W/(m³/h))	0.24					
Control typology	Local demand control					
Maximum internal leakage rates (%)	2.7					
Maximum external leakage rates (%)	2.7					
Sound power level (dB(A))	50					
The annual electricity consumption (AEC) (kWh/a)	Cold		Average		Warm	
	127		127		127	
The annual heating saved (AHS) (kWh/a)	Cold		Average		Warm	
	8938		4569		2066	