VV-P1

Flow meter and cut-off valve (rectangular)



	Unit of measurement	VV-P1
Weight	kg	5.05

Dimensions

A	A1	A2	B	B1	B2	C	C1	C2	D	D1	D2	F	H	m, шт/pcs	n, шт/pcs
306	280	246	272	248	212	355	330	307	355	330	307	13.1	310	8	8

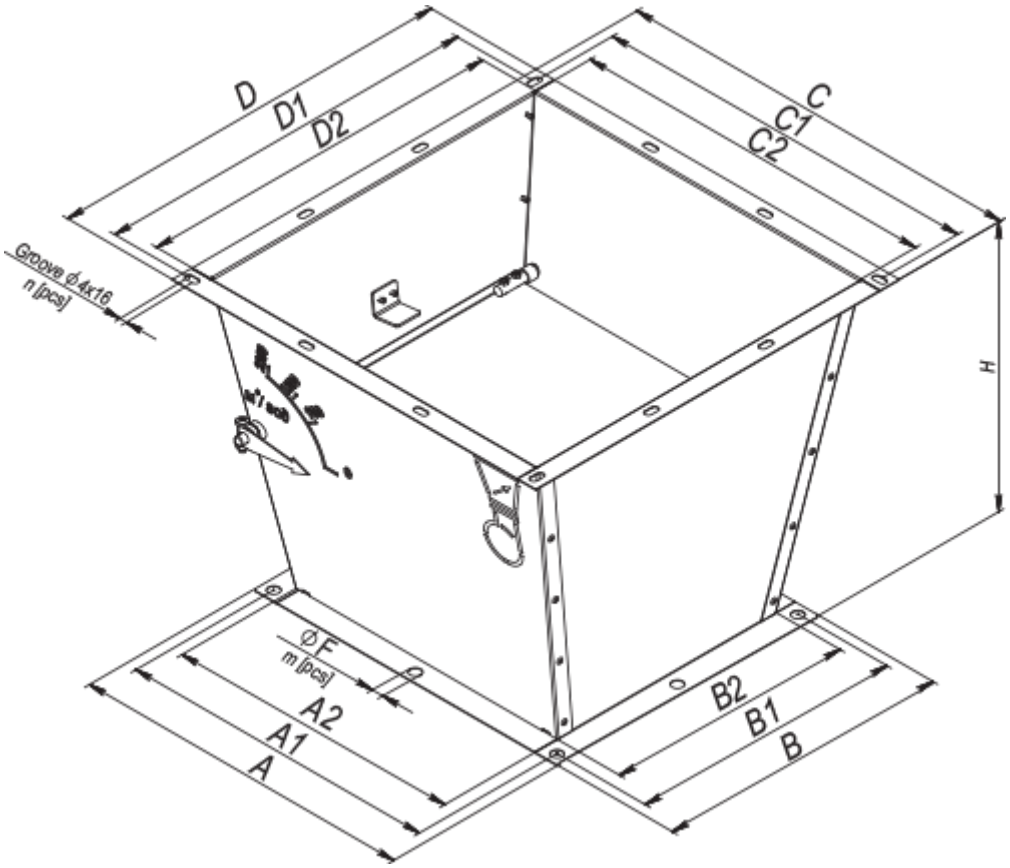
D
D1
D2
C
C1
C2
Groove ϕ 4x16
n [pcs]
H
ϕF
m [pcs]
A2
A1
A
B2
B1
B