VVG 1000x500

Flexible anti-vibration inserts for round air ducts



	Unit of measurement	VVG 1000x500
Weight	kg	3.2

Dimensions

B	B1	B2	H	H1	H2
1000	1020	1040	500	520	540

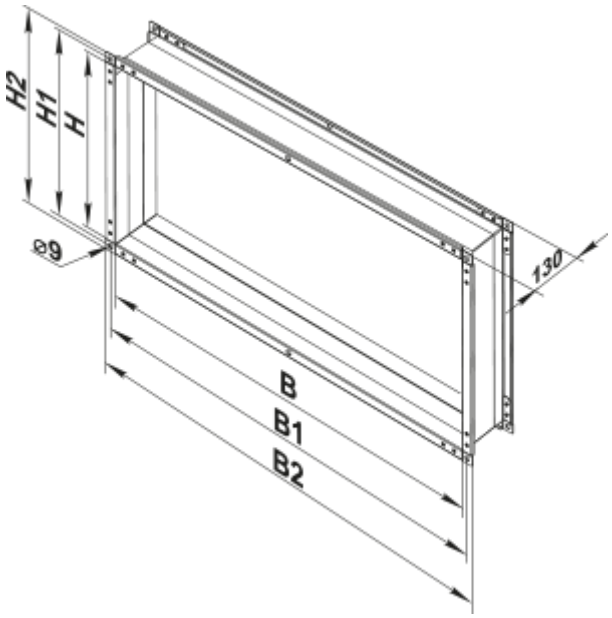
H2
H1
H
ø9
130
B
B1
B2