VVGF-ERV-M-200

Flexible joint



	Unit of measurement	VVGF-ERV-M-200
Weight	kg	0.72
Transported air temperature (max)	°C	80
Transported air temperature (min)	°C	-40

Dimensions

L	H	L1	H1	L2	H2	n
167	138	187	158	207	178	16

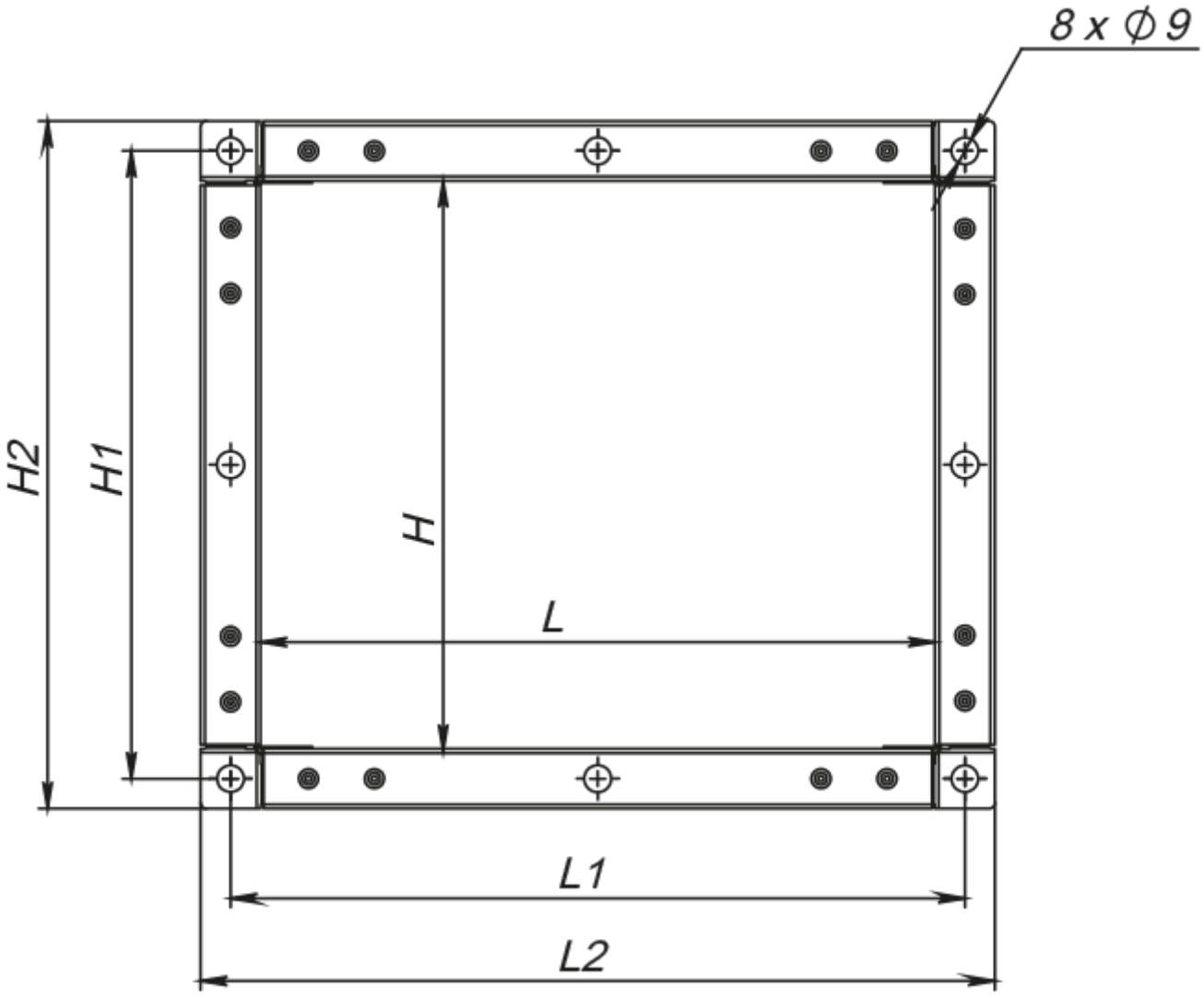
8 x Ø 9
H2
H1
H
L
L1
L2

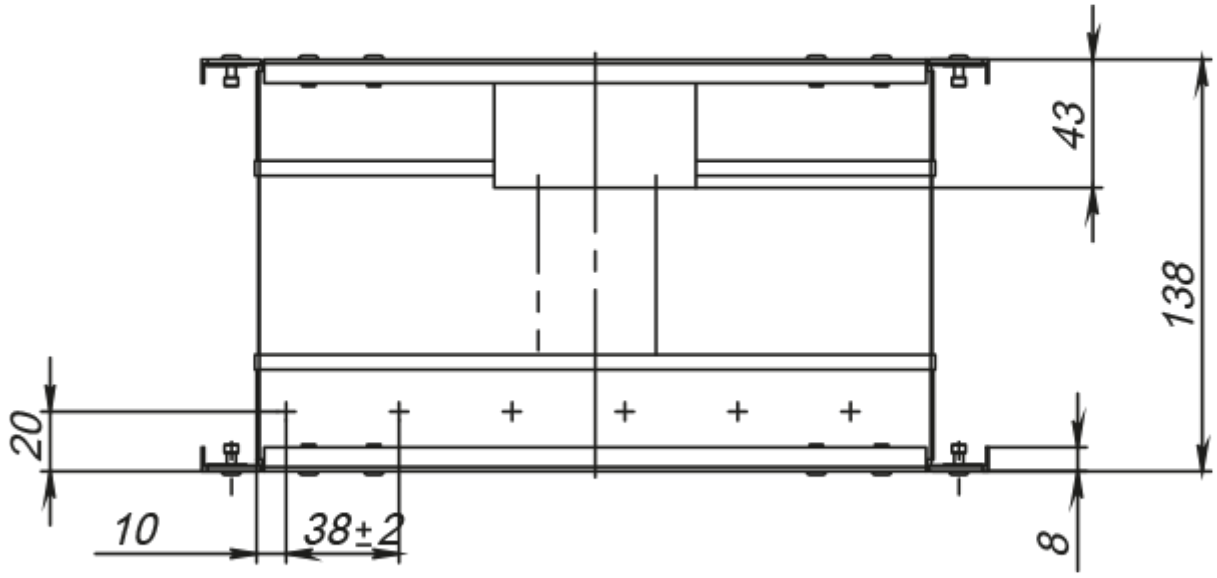
43
138
20
10
38±2
8