# VVGF-ERV-M-240

Flexible joint



| | Unit of measurement | VVGF-ERV-M-240 |
|---|---|---|
| Weight | kg | 0.88 |
| Transported air temperature (max) | °C | 80 |
| Transported air temperature (min) | °C | -40 |

## Dimensions

| L | H | L1 | H1 | L2 | H2 | n |
|---|---|---|---|---|---|---|
| 211 | 181.5 | 231 | 201.5 | 251 | 221.5 | 21 |

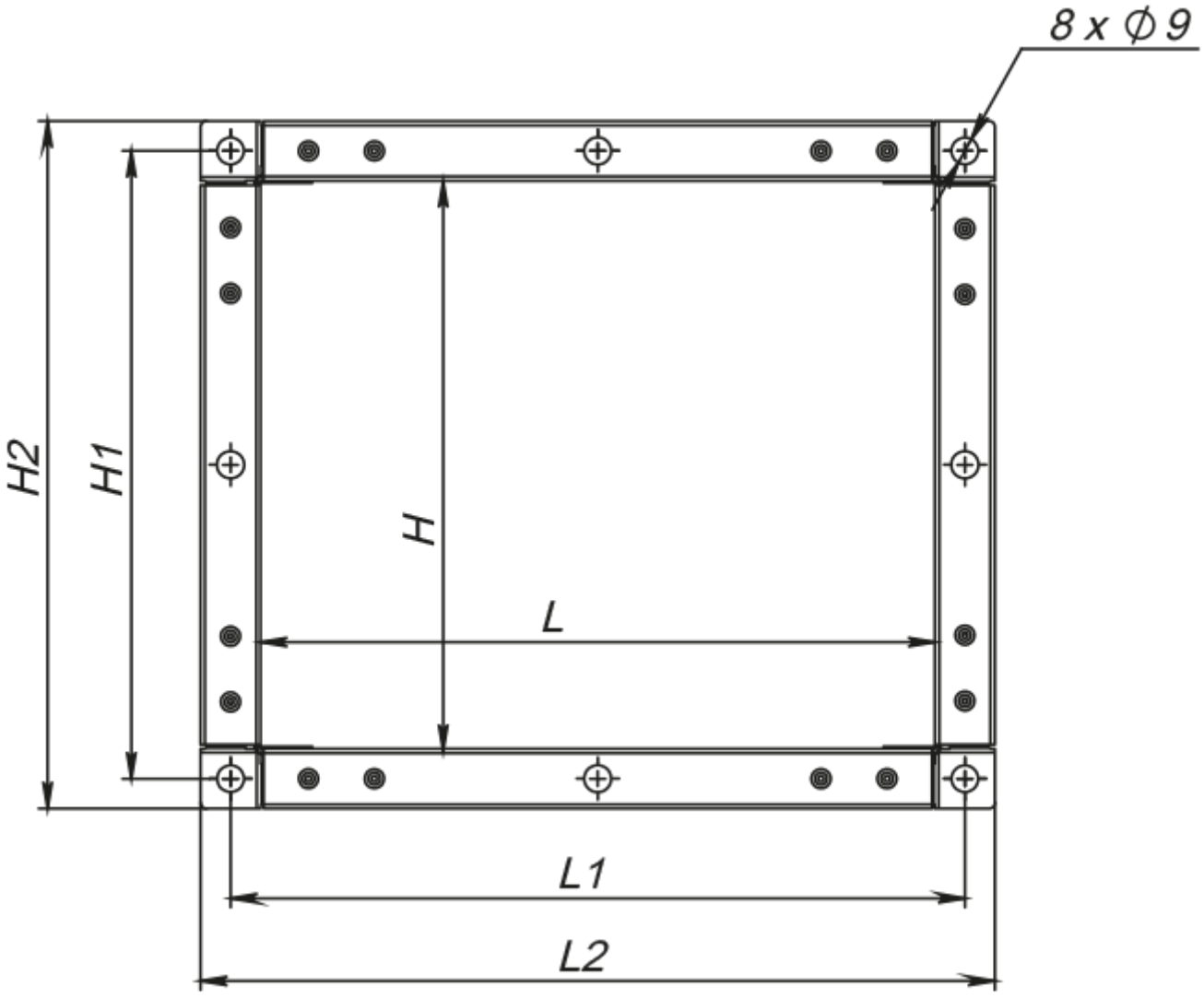
8 x Ø 9
H2
H1
H
L
L1
L2

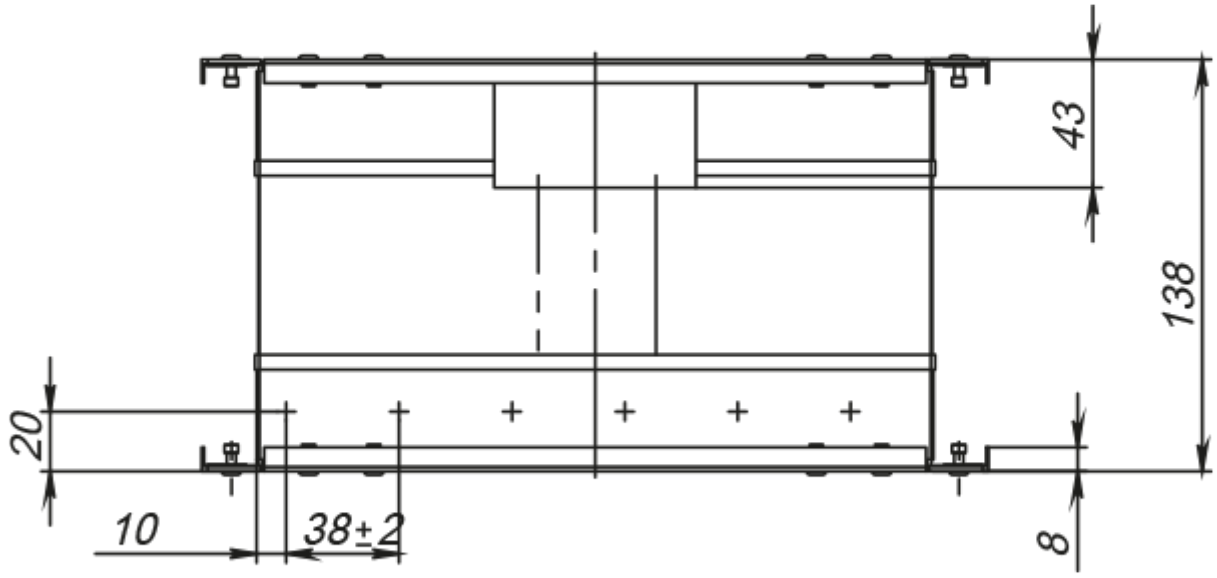
43
138
20
10
38±2
8