Series **Plastic distribution boxes 52 mm**

Supply or exhaust ventilation systems of residential spaces. For distribution of air from the ventilation unit through the air ducts

- Casing material: Polypropylene

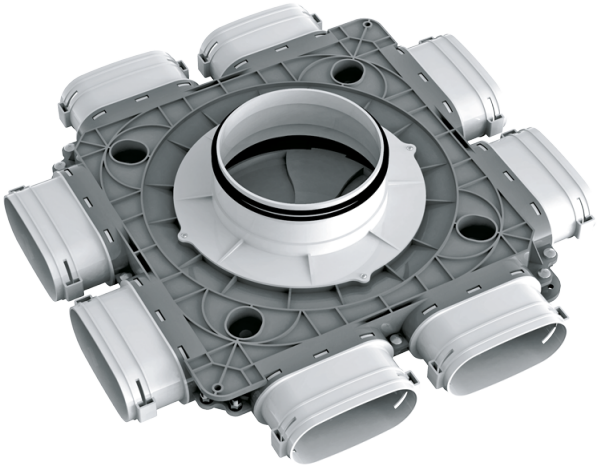

Lineup	
	FlexiVent 1060125/52x8
	FlexiVent 1060150/52x8
	FlexiVent 1060160/52x8
	FlexiVent 1060200/52x8