Series VUT P mini

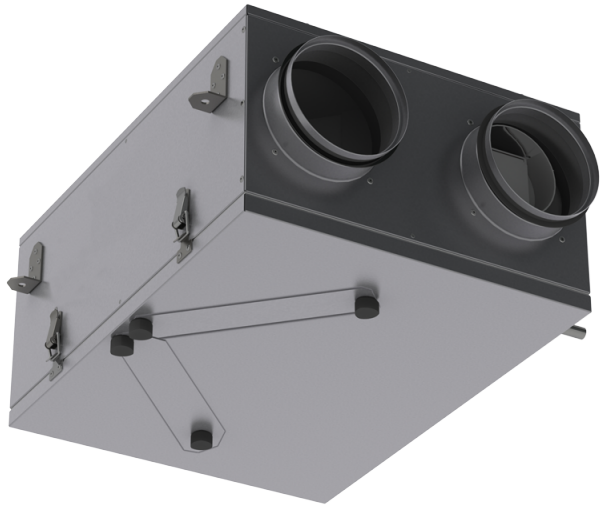

Suspended air handling units with a crossflow polystyrene heat exchanger

- Heat exchanger type: Cross flow
- Heat exchanger material: Polystyrene, Enthalpy
- Sound-insulated casing
- Casing material: Galvanized steel

Lineup	Connected air duct size, mm	Rated power, W	Maximum airflow, m³/h	Service side	Control system
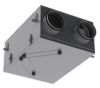 VUT 100 P mini	125	56	100	Universal	A3
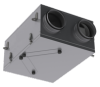 VUE 100 P mini	125	56	100	Universal	A3