USER'S MANUAL

VDKO

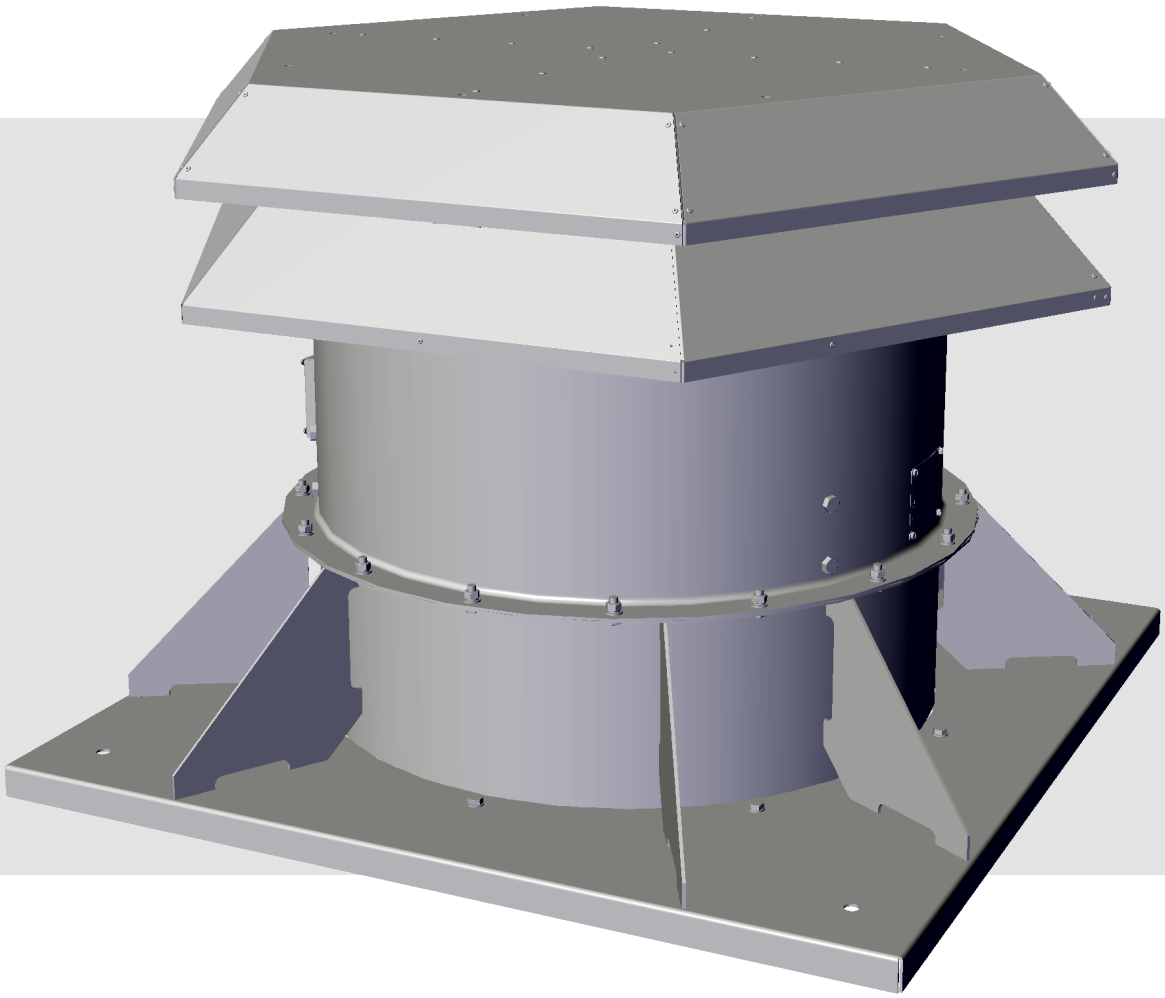

Roof axial smoke exhaust fan

CONTENTS

Safety requirements 2
Purpose 4
Delivery set 4
Designation key 5
Technical data 6
Mounting and set-up 8
Connection to power mains 10
Commissioning 12
Technical maintenance 13
Storage and transportation regulations 15
Manufacturer's warranty 16
Certificate of acceptance 19
Seller information 19
Installation certificate 19
Warranty card 19

This user's manual is a main operating document intended for technical, maintenance, and operating staff.
The manual contains information about purpose, technical details, operating principle, design, and installation of the VDKO unit and all its modifications.
Technical and maintenance staff must have theoretical and practical training in the field of ventilation systems and should be able to work in accordance with workplace safety rules as well as construction norms and standards applicable in the territory of the country.

SAFETY REQUIREMENTS

This unit is not intended for use by persons (including children) with reduced physical, sensory or mental capabilities, or lack of experience and knowledge, unless they have been given supervision or instruction concerning use of the unit by a person responsible for their safety.
Children should be supervised to ensure that they do not play with the unit.
This appliance can be used by children aged from 8 years and above and persons with reduced physical, sensory or mental capabilities or lack of experience and knowledge if they have been given supervision or instruction concerning use of the appliance in a safe way and understand the hazards involved.
Cleaning and user maintenance shall not be done by children without supervision.
Children shall not play with the appliance.

Connection to the mains must be made through a disconnecting device, which is integrated into the fixed wiring system in accordance with the wiring rules for design of electrical units, and has a contact separation in all poles that allows for full disconnection under overvoltage category lll conditions.

If the supply cord is damaged, it must be replaced by the manufacturer, its service agent, or similarly qualified persons in order to avoid a safety hazard.

Ensure that the unit is switched off from the supply mains before removing the guard.

Precautions must be taken to avoid the back-flow of gases into the room from the open flue of gas or other fuel-burning appliances.

The appliance may adversely affect the safe operation of appliances burning gas or other fuels (including those in other rooms) due to back flow of combustion gases. These gases can potentially result in carbon monoxide poisoning. After installation of the unit the operation of flued gas appliances should be tested by a competent person to ensure that back flow of combustion gases does not occur.

All operations described in this manual must be performed by qualified personnel only, properly trained and qualified to install, make electrical connections and maintain ventilation units.
Do not attempt to install the product, connect it to the mains, or perform maintenance yourself. This is unsafe and impossible without special knowledge.
Disconnect the power supply prior to any operations with the unit.
All user's manual requirements as well as the provisions of all the applicable local and national construction, electrical, and technical norms and standards must be observed when installing and operating the unit.
Disconnect the unit from the power supply prior to any connection, servicing, maintenance, and repair operations.
Connection of the unit to power mains is allowed by a qualified electrician with a work permit for the electric units up to 1000 V after careful reading of the present user's manual.
Check the unit for any visible damage of the impeller, the casing, and the grille before starting installation. The casing internals must be free of any foreign objects that can damage the impeller blades.
While mounting the unit, avoid compression of the casing! Deformation of the casing may result in motor jam and excessive noise.
Misuse of the unit and any unauthorised modifications are not allowed.
Transported air must not contain any dust or other solid impurities, sticky substances, or fibrous materials.
Do not use the unit in a hazardous or explosive environment containing spirits, gasoline, insecticides, etc.
Do not close or block the intake or extract vents in order to ensure the efficient air flow.
Do not sit on the unit and do not put objects on it.
The information in this user's manual was correct at the time of the document's preparation.
The Company reserves the right to modify the technical characteristics, design, or configuration of its products at any time in order to incorporate the latest technological developments.
Never touch the unit with wet or damp hands.
Never touch the unit when barefoot.
Do not install or use the product until all construction and finishing work has been completed in the room where it is to be installed.
BEFORE INSTALLING ADDITIONAL EXTERNAL DEVICES, READ THE RELEVANT USER MANUALS.



THE PRODUCT MUST BE DISPOSED SEPARATELY AT THE END OF ITS SERVICE LIFE.

DO NOT DISPOSE THE UNIT AS UNSORTED DOMESTIC WASTE.

PURPOSE

The VDKO series fan is designed for roof mounting in industrial, public, residential, administrative, and other premises (except for categories A and B of explosive fire hazard in accordance with the NPB 105-03) and is used in emergency exhaust ventilation for forced removal of smoke, heated gases and simultaneous removal of heat generated in a fire outside the premises where the fire occurs.
It is used in for continuous operation in general ventilation systems.

The fan handles smoke and air mixtures with temperatures up to +400 °C for 120 minutes.
An inspection hatch is provided on the fan's casing. All the casing components are powder coated for protection against environmental exposure.
Multiple fans are allowed to be installed on a single roof close to each other.

DELIVERY SET

Name	Number
Fan	1 pc.
User's manual	1 pc.
Packing box	1 pc.

DESIGNATION KEY

VDKO - 630 - 4 D / 2,2 - 6 / 45 / AL - U 1 - 300/2 - 60Hz

VDKO — Roof axial smoke exhaust fan

Standard size (air duct diameter) [mm]

Number of motor poles

Motor phases: E – single-phase (upon request); D — three-phase

Motor power [kW]

No. of impeller blades [pcs.]

Installation angle of blades [°]

Blade material: ST — steel; AL — aliminium

Climatic category
U — temperate climate (-40…+40 °C)
HL — cold climate (-60…+40 °C)
UHL — moderately cold climate (-60…+40 °C)
T — tropical climate (-10…+50 °C)
M — maritime moderately cold climate (-40…+40 °C)
O — general climatic design, except for maritime (-60…+50 °C)
OM — general maritime climatic design (-40…+40 °C)
V — one-for-all climatic design (-60…+50 °C)

Placement category
1: outdoors

Fire resistance rating:
200/2 — 200 °C, 2 hours (upon request)
300/2 — 300 °C, 2 hours
400/2 — 400 °C, 2 hours (upon request)

Power supply frequency:
_ – 50 Hz
60Hz – 60 Hz

TECHNICAL DATA

- The transported air temperature depends on the fan's applied climatic category (see the designation key).
- The maximum permissible concentration of solids and dust in the handled air is 10 mg/m³.
- The unit is rated as a Class I electrical appliance.
- Ingress protection rating against access to hazardous parts and water ingress is IPX4.

Overall dimensions

Model	ØD	ØD1	ØD2	Ød	n	B	B1	A	A1	Ød1	n1
VDKO-400…	400	450	490	16	24	580	701	705	612	7	6
VDKO-450…	450	500	540	16	24	580	701	774	672	7	6
VDKO-500…	500	560	600	24	24	640	770	854	742	11	6
VDKO-560…	560	620	660	24	24	750	920	910	790	11	6
VDKO-630…	630	690	730	24	24	750	920	991	860	11	6
VDKO-710…	710	770	810	24	32	980	1150	1139	988	11	8
VDKO-800…	800	860	900	24	32	980	1150	1236	1072	11	8
VDKO-900…	900	970	1015	30	32	1050	1220	1370	1189	13	8
VDKO-1000…	1000	1070	1115	30	32	1340	1510	1618	1404	13	8
VDKO-1120…	1120	1190	1270	30	40	1340	1510	1789	1552	13	10
VDKO-1250…	1250	1320	1400	30	40	1500	1700	1968	1707	13	10

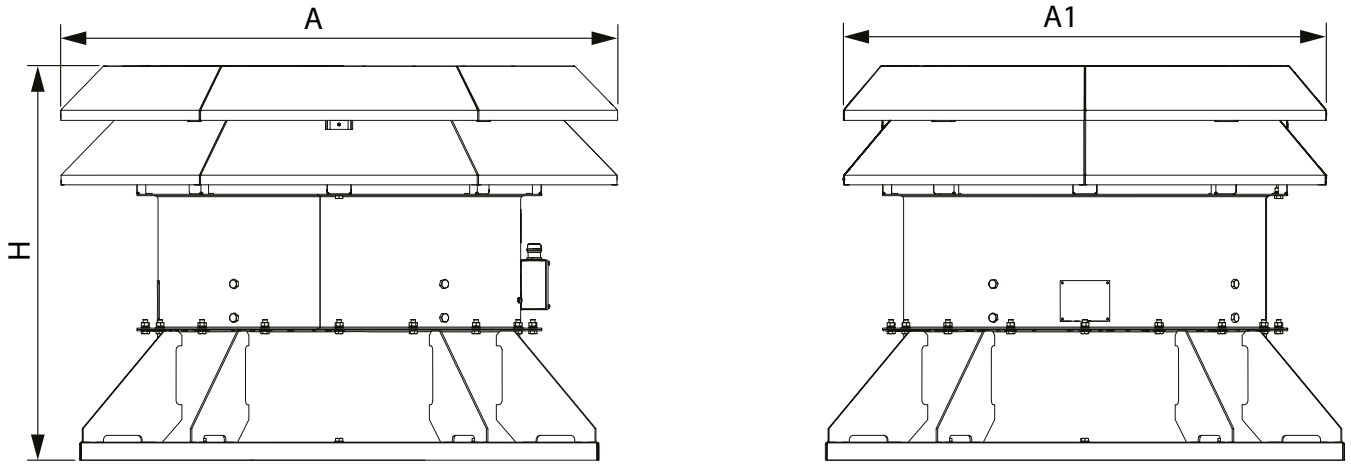

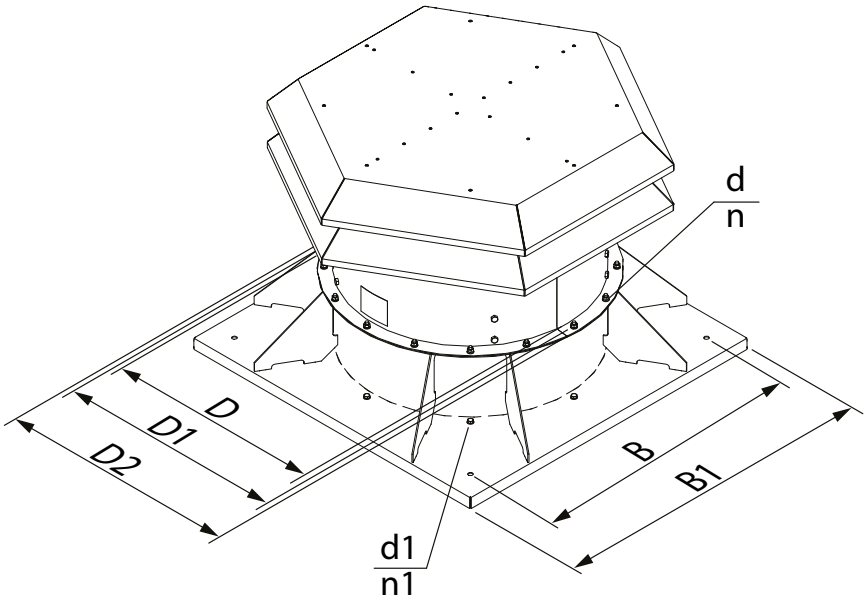

MOUNTING AND SET-UP

READ THE USER'S MANUAL BEFORE INSTALLING THE UNIT.
BEFORE INSTALLING ADDITIONAL EXTERNAL DEVICES, READ THE APPROPRIATE USER MANUALS.

Prior to mounting the fan:
- read the present User's manual carefully.
- check the fan for any mechanical damages caused by wrong transportation.
- make sure that the fan impeller of the fan can rotate unobstructed;
- make sure there is no condensate on the motors;
- check the electric insulation resistance between a motor's coils, and between each coil and the motor's casing.

Follow all safety instructions when preparing the fan for the operation and during its operation.

Fan mounting
- install the fan on the building roof, out of possible fire areas.
- check the roof frameworks for sufficient rigidity in installation places.
- the fan is designed for vertical installation only (vertical fan shaft) on a concrete or steel base plate of min 250 mm height (with respect to possible level of precipitation).
- check that the fan components do not get deformed during mounting.
- provide free and unhampered air extraction from the fan.

The fan delivery set may include a mounting frame (available separately).
Install the mounting frame on a load carrying roof section true-vertical inside a prepared opening.
The opening size must be sufficient to ensure free passage of air ducts with connecting flanges of the corresponding diameter in accordance with the DIN 24154 Series 3.
Fix the mounting frame to the load-carrying roof surface in compliance with construction norms and standards applicable for standard building designs. The fan fastening to the mounting frame is carried out with 4 anchor bolts in the frame's corners.
Attach the backdraft damper or the first air duct section directly to the fan prior to its installation.
The backdraft damper is delivered separately.
Provide additional fixing of the air ducts to the building structures to avoid load transfer from the air ducts to the fan.

Do not put the fan on the air duct while mounting to avoid its deformation.

Fastening the fan to the mounting frame is carried out with bolts and washers of the appropriate size.

After installing the product, check again to make sure that the fan impeller rotates freely.

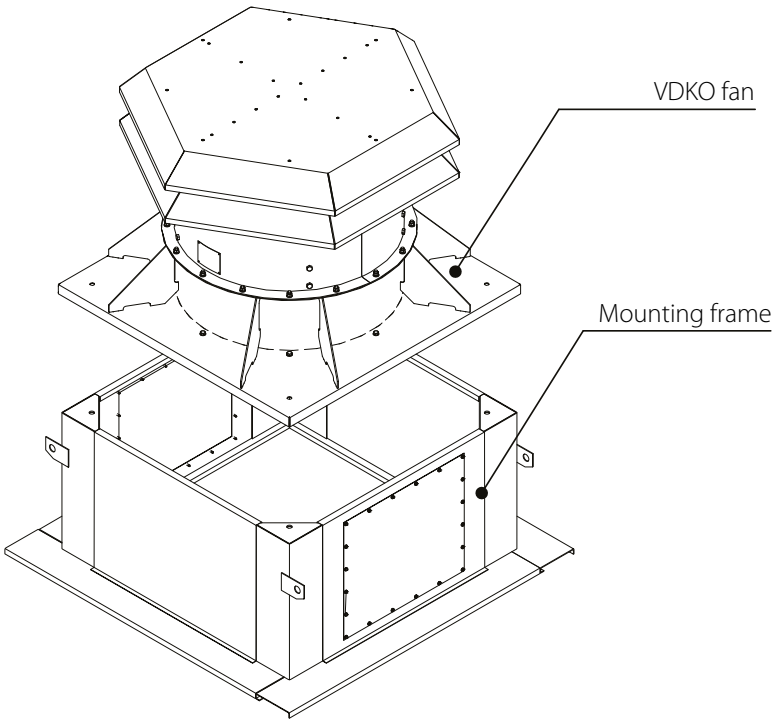

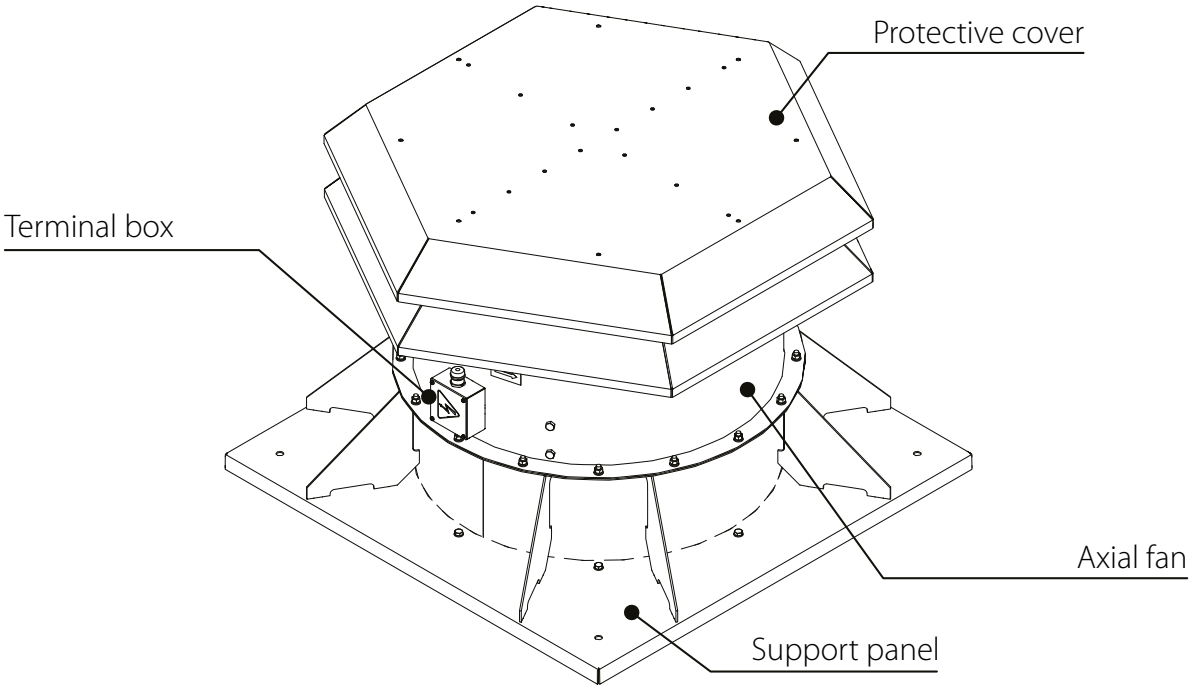

The roof smoke exhaust fan consists of a welded support panel to which the fan is attached in a fully welded metal casing with rolled flanges, ensuring high rigidity and minimum clearances between the casing and blades. A protective hood is provided for protection from precipitation exposure.

The fan impeller has a modular design and is connected to the motor.
The fan is driven by a three-phase asynchronous single-speed or two-speed motor with a squirrel cage rotor installed inside the casing.

CONNECTION TO POWER MAINS

DISCONNECT THE POWER SUPPLY PRIOR TO ANY OPERATIONS WITH THE UNIT.

CONNECTION OF THE UNIT TO POWER MAINS IS ALLOWED BY A QUALIFIED ELECTRICIAN WITH A WORK PERMIT FOR THE ELECTRIC UNITS UP TO 1000 V AFTER CAREFUL READING OF THE PRESENT USER'S MANUAL.

THE RATED ELECTRICAL PARAMETERS OF THE UNIT ARE GIVEN ON THE MANUFACTURER'S LABEL

ANY TAMPERING WITH THE INTERNAL CONNECTIONS IS PROHIBITED AND WILL VOID THE WARRANTY.

The smoke exhaust fan is a component part and is not designed for stand-alone operation.
The fan must be integrated into an automatically controlled ventilation system.
The fan motor is designed for connection to a three-phase AC power supply.
Connect the fan motor through the terminal block according to the wiring diagram using a durable, insulated and heat-resistant cable. The terminal block with terminal designation is located inside the terminal box.
The jumpers were mounted on the corresponding diagrams when assembling the fan at the factory.

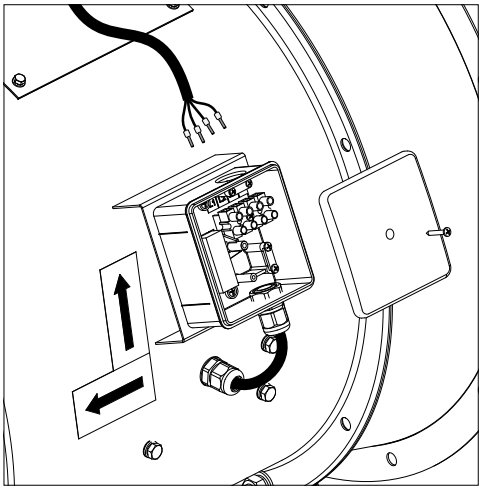

Wiring diagram

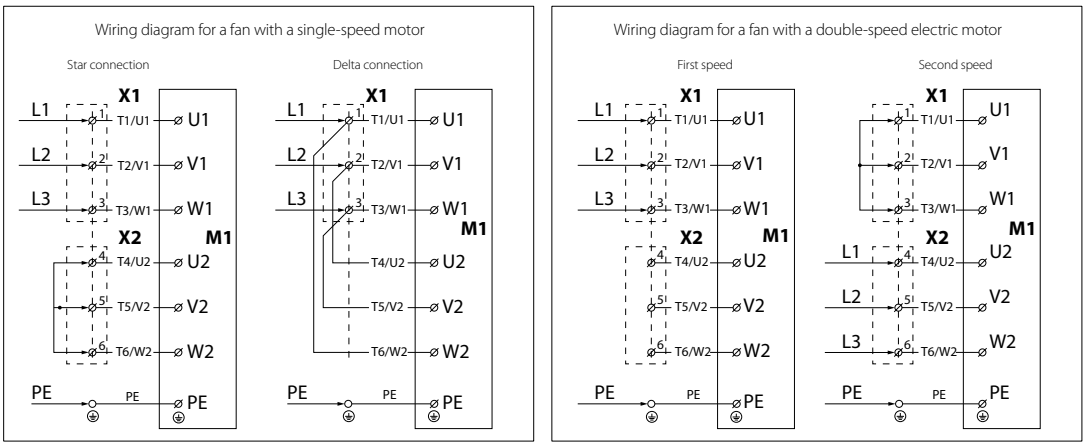

Caution! The wiring connection type is specified in the technical data table.

The wiring must be carried out on the terminal board of the terminal box located on the fan casing according to the wiring diagram and terminal designations. The terminal designations label is located inside the terminal box. The fan's electric parameters are specified on the label located on the fan's casing.

The electric motor is not equipped with integrated thermal protection, which must be accounted for when selecting a starter or contactor.

MAKE SURE THAT THE FAN IMPELLER ROTATES IN THE DIRECTION MARKED BY THE ARROW ON THE FAN CASING.

IF NECESSARY, CHANGE THE IMPELLER ROTATION DIRECTION BY ALTERING THE PHASE SEQUENCE ON THE ELECTRIC MOTOR TERMINALS.

ASYNCHRONOUS ELECTRIC MOTOR STARTING METHODS

There are several methods for starting asynchronous squirrel-cage electric motors.
The most common methods are: direct-on-line (DOL), with a soft starter (SS) or with a frequency converter (FC).

Direct-on-line starting
In case of direct-on-line starting (i.e. by connecting the motor to the electric mains with a simple line contactor), the motor starting time significantly increases due to high inertia of the impeller, which, in turn, results in high in-rush starting currents in the circuit. These currents of long duration may cause voltage slumps (especially if the feed line section falls short of the requirements), which may affect load operation.
The in-rush current consumed by an electric motor in case of DOL starting is 5-8 times larger than the rated value (or even 10-14 times larger in some rare instances). It should be noted that the torque developed by the motor also significantly exceeds the rated value.
Upon energisation the motor operates as a transformer with a squirrel-cage secondary winding formed by the rotor cage with a very low resistance.
The rotor develops high induced current causing a rush of current in the feed line.
The startup torque during starting averages 0.5-1.5 of the rated torque value.

Despite such advantages as simple construction, high startup current, quick start and low cost, direct-on-line systems are suitable only in the following cases:
- the motor power is low compared to the mains power which limits the adverse effect of the rush of current
- the driven mechanism does not require gradual speed build-up or is equipped with a damping device to smooth out the inrush
- the high startup torque has no adverse effects on the operation of the driven mechanism

Soft start. SS starting
A soft starter gradually increases the voltage supplied to the motor – from the initial to the rated value.
This starting system can be used to meet the following goals:
- limit the motor current
- regulate the torque

Regulation by limiting the current sets the maximum in-rush current equal to 300-400 % (or 250 % in some rare instances) of the rated current and reduces torque characteristics. This type of regulation is especially suited for turbomachinery such as centrifugal pumps and fans.
Regulation by variation of torque optimizes the torque during startup and reduces in-rush current in the circuit. These conditions are suitable for mechanisms with constant load resistance.
This type of soft starting may differ in the implementation pattern:
- motor start
- motor start and stop
- device bridging at the end of start sequence
- start and stop of several motors in stage circuits

Soft start. FC starting
During the starting the FC raises the frequency from 0 Hz to the electrical mains frequency (50 or 60 Hz). As the frequency is increased gradually, the motor can be assumed to operate at its rated speed for a given frequency value. Furthermore, on the assumption that the motor runs at its rated speed the nominal torque should be immediately available whereas the current will be approximately equal to the rated value.
This starting system is used for speed control and regulation and can be used in the following cases:
- start with high-inertia load
- start with high load and limited-capacity power supply source
- optimization of electric power consumption depending on turbomachinery speed

The aforementioned starting system can be used for all types of mechanisms.

Problems associated with DOL starting
The problems caused by DOL starting may be divided into two groups:
1. An abrupt start causes mechanical shock, jolts in the mechanism, shock removal of free play etc.
2. A heavy start cannot be completed.

Let us review three variations of a heavy start:
1. The feed line performance is barely sufficient or insufficient to maintain the induced current.
Typical symptoms: Upon starting the circuit breakers at the system input are tripped; the lights, certain relays and contactors go off, and the supply generator shuts down.
Solution: In the best-case scenario an SS device may help reduce the in-rush current to 250 % of the motor rated current. If this is insufficient, an FC is necessary.

2. The motor cannot start the mechanism with DOL starting.
Typical symptoms: The motor fails to turn or "freezes" at certain speed which is maintained until actuation of the protection suite.
Solution: This problem may not be solved with an SS device. The motor develops insufficient shaft torque. However, this problem can be addressed by using an FC, but each case may be different.

3. The motor spins up the mechanism with authority, but fails to reach the rated rotation speed.
Typical symptoms: The input automatic circuit breaker is tripped during spin-up. This often happens with heavy-weight fans with a considerable rotation speed.
Solution: Such problems may be addressed with an SS device, but not with 100 % certainty. The closer the motor speed to the rated value during the actuation of the protective equipment, the higher the chances of success. The use of an FC in this case helps solve the problem fundamentally.

Standard switching equipment (automatic circuit breakers, contactors and motor starters) is not designed to withstand prolonged overloads normally causing the fan to shut down automatically DOL starting that continues for a long period of time.
Using switching equipment with a higher maximum current rating renders the electric motor protection system less sensitive. As a result the switching equipment will not be able to detect motor overload in time due to a high current sensing threshold. Such problems as mentioned above can only be addressed by utilizing a soft starter or a frequency converter to start the fan.

COMMISSIONING

THE ORGANISATION RESPONSIBLE FOR THE COMMISSIONING SHALL BE RESPONSIBLE FOR PROPER MOTOR PHASING AND STARTING PATTERN SELECTION.

DURING STARTING THE IN-RUSH CURRENTS OF THE FAN MAY SEVERAL TIMES EXCEED THE RATED VALUES.

SEE "ASYNCHRONOUS ELECTRIC MOTOR STARTING METHODS" IN THE "CONNECTION TO POWER MAINS" SECTION

- After fan starting make sure that the electric motor rotates properly without undue vibration and abnormal noise.
- Make sure that the fan impeller rotates in the direction marked by the arrow on the fan casing. If necessary, change the rotation direction of the impeller by reversing the phase sequence (for a three-phase motor) or by rewiring according to the wiring diagram located inside the terminal box (for a single-phase motor).
- Make sure that the fan energy consumption complies with the value given on the equipment nameplate and check the motor for overheating.
- The phase current should be checked once the fan reaches the rated operating conditions.
- Do not switch the fan on and off several times without pauses as this may result in damage to the winding or insulation due to overheating.

TECHNICAL MAINTENANCE



DISCONNECT THE UNIT FROM POWER SUPPLY BEFORE ANY MAINTENANCE OPERATIONS!

MAKE SURE THE UNIT IS DISCONNECTED FROM POWER MAINS BEFORE REMOVING THE PROTECTION.



PRIOR TO COMMENCING ANY TECHNICAL MAINTENANCE PUT UP A PROHIBITORY SIGN ON THE FAN STARTING PANEL:

"DO NOT SWITCH ON! MEN AT WORK!"



AVOID LIQUID SPILLS ON THE MOTOR! DO NOT USE AGGRESSIVE SOLVENTS AND SHARP OBJECTS FOR CLEANING!

Prior to performing any technical maintenance and repair disconnect the fan from the electric mains and wait until its rotating parts come to a complete stop. Prior to commencing any technical maintenance put up a prohibitory sign on the fan starting panel: "Do not switch on! Men at work!". The technical maintenance includes periodic cleaning of the surfaces from accumulated dust and dirt.

Maintenance operations of the unit are required at least once per year:

- Check the grounding screw terminals and electric connectors for proper tightness and tighten them up if necessary.
- Check the casing fastening screws for tightness and tighten them up if necessary.
- Check the bolt connecting the motor shaft to the hub for proper tightness and tighten it up if necessary.
- Check the fan impeller for contamination and clean it up if necessary.

To clean the impeller, remove the side cover.

Cut off power supply when doing work related to the safety of maintenance. Other work related to electrical characteristics must be performed with the power supplied.

TROUBLESHOOTING

Problem	Possible reasons	Elimination
The fan will not start.	No power supply.	Check the mains switch. Check the electrical connections according to the wiring diagram.
	Jammed motor.	Carefully check the fan impeller for possible seizure and eliminate it, if necessary. If the impeller is in order, replace the electric motor.
The switching equipment activates upon fan start-up.	Short circuit in the fan or the electric circuit between the fan and the switching equipment.	Eliminate the cause of a short circuit.
	Excessive current consumption due to an overload in the electric mains.	Eliminate the cause of excessive current consumption.
	Improper fan starting method.	Use a soft starter or frequency converter to start the motor **(see "Asynchronous Electric Motor Starting Methods" in the "Connection to power mains" section)**.
	Improper switching equipment.	Re-select the switching equipment in accordance with the current regulations and equipment specifications.
	The installed switching equipment is of poor quality or its actual performance falls short of the rated values stated by the manufacturer.	Re-select the switching equipment by choosing a unit which successfully passed commutation and load tests and has a technical compliance certificate. The selection should be limited to the top five foreign switching equipment manufacturers.

The fan fails to reach the required rotation speed due to serious overheating of the fan motor.	Fan motor overloaded.	Eliminate the overload.
	Improper fan starting method.	Use a soft starter or frequency converter to start the motor **(see "Asynchronous Electric Motor Starting Methods" in the "Connection to power mains" section)**.
The fan motor runs at overload capacity with current consumption in excess of the rated value.	The fan supplies more air than expected upon motor capacity selection.	Measure network resistance. Throttle down the network (add aerodynamic resistance to the air duct network).
	Wrong motor phasing. The impeller rotates in the opposite direction of the arrow on the fan casing.	If necessary, change the impeller rotation direction by changing the phase sequence on the electric motor terminals.
	Air ducts clogged.	Clean the air duct or the impeller.
The fan supplies more air than expected.	The resistance values used during the ventilation network calculations are too conservative.	Check the air ducts for proper shape and cross section as well as for any dampers present.
	The cross section of air ducts increased and their number reduced during the installation.	Throttle down the network (add aerodynamic resistance to the air duct network).
	Wrong choice of the fan.	Replace the fan with a unit of proper standard size.
The fan supplies less air than expected.	Wrong calculation of the ventilation network and wrong selection of the fan.	Re-calculate the network parameters and select a matching fan.
	The network resistance exceeds the design calculations.	Re-arrange the ventilation network to decrease its aerodynamic resistance.
	Wrong direction of the impeller rotation.	If necessary, change the impeller rotation direction by changing the phase sequence on the electric motor terminals **(see the "Commissioning" section)**.
	Air leak through a loose air duct connection.	Eliminate the air leak. Seal the air duct connection.
	Impeller or air duct contamination with foreign objects or debris.	Clean the impeller or the air ducts from foreign objects or debris.
Excessive noise or vibration both inside the fan and in the circuit.	Loose screw connections.	Check the screw connections for proper tightness.
	No flexible joints between the fan and the ventilation network on the suction and discharge sides.	Install flexible joints.
	Loose connection of valves and dampers to the air ducts.	Tighten up the fasteners of valves and dampers.
	Impeller or air duct contamination with foreign objects or debris.	Clean the impeller or the air ducts from foreign objects or debris.
	Worn bearings.	Replace the bearings.
	Unstable power supply, unstable motor operation.	Check the stability of power supply parameters and electric motor operation.

STORAGE AND TRANSPORTATION REGULATIONS

- Store the unit in the manufacturer's original packaging box in a dry closed ventilated premise with temperature range from +5 ˚C to +40 ˚C and relative humidity up to 70 %.
- Storage environment must not contain aggressive vapors and chemical mixtures provoking corrosion, insulation, and sealing deformation.
- Use suitable hoist machinery for handling and storage operations to prevent possible damage to the unit.
- Follow the handling requirements applicable for the particular type of cargo.
- The unit can be carried in the original packaging by any mode of transport provided proper protection against precipitation and mechanical damage. The unit must be transported only in the working position.
- Avoid sharp blows, scratches, or rough handling during loading and unloading.
- Prior to the initial power-up after transportation at low temperatures, allow the unit to warm up at operating temperature for at least 3-4 hours.

RISK OF UNIT DAMAGE.
ROTATE THE MOTOR ROTOR BY HAND TO A NEW POSITION EVERY 3 MONTHS DURING STORAGE.

SAFETY INSTRUCTIONS FOR LOADING, UNLOADING AND INSTALLATION WORK

CAUTION!
EXERCISE CAUTION DURING HANDLING AND TRANSPORTATION OPERATIONS!

- Be sure to consider the weight of the product and the load-carrying capacity of the handling equipment.
- Transport the fan using appropriate handling equipment: a crane, cross-bar or forklift truck.
- Regardless of the equipment used, the side panels must always be protected to prevent damage by the forklift or cables.
- Select lifting accessories of sufficient length to ensure that the load is evenly distributed.
- Wear protective gloves and safety shoes when working.
- Avoid blows and shocks during transportation.
- Only use suitable lifting equipment for handling.
- Never stand under a suspended fan!
- The VDKO fans are equipped with eyebolts for hooking with lifting accessories.

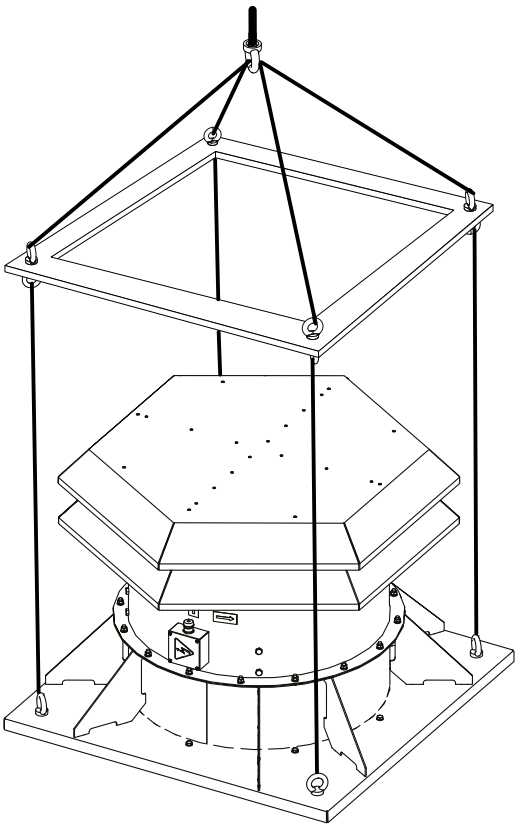

MANUFACTURER'S WARRANTY

The product is in compliance with EU norms and standards on low voltage guidelines and electromagnetic compatibility. We hereby declare that the product complies with the provisions of Electromagnetic Compatibility (EMC) Directive 2014/30/EU of the European Parliament and of the Council, Low Voltage Directive (LVD) 2014/35/EU of the European Parliament and of the Council and CE-marking Council Directive 93/68/EEC. This certificate is issued following test carried out on samples of the product referred to above.
The manufacturer hereby warrants normal operation of the unit for 24 months after the retail sale date provided the user's observance of the transportation, storage, installation, and operation regulations. Should any malfunctions occur in the course of the unit operation through the Manufacturer's fault during the guaranteed period of operation, the user is entitled to get all the faults eliminated by the manufacturer by means of warranty repair at the factory free of charge. The warranty repair includes work specific to elimination of faults in the unit operation to ensure its intended use by the user within the guaranteed period of operation. The faults are eliminated by means of replacement or repair of the unit components or a specific part of such unit component.

The warranty repair does not include:
- routine technical maintenance
- unit installation/dismantling
- unit setup

To benefit from warranty repair, the user must provide the unit, the user's manual with the purchase date stamp, and the payment paperwork certifying the purchase. The unit model must comply with the one stated in the user's manual. Contact the Seller for warranty service.

The manufacturer's warranty does not apply to the following cases:
- User's failure to submit the unit with the entire delivery package as stated in the user's manual including submission with missing component parts previously dismounted by the user.
- Mismatch of the unit model and the brand name with the information stated on the unit packaging and in the user's manual.
- User's failure to ensure timely technical maintenance of the unit.
- Damage to the unit casing and internal components caused by the user.
- Redesign or engineering changes to the unit.
- Replacement and use of any assemblies, parts and components not approved by the manufacturer.
- Unit misuse.
- Violation of the unit installation regulations by the user.
- Violation of the unit control regulations by the user.
- Unit connection to power mains with a voltage different from the one stated in the user's manual.
- Unit breakdown due to voltage surges in power mains.
- Discretionary repair of the unit by the user.
- Unit repair by any persons without the manufacturer's authorization.
- Expiration of the unit warranty period.
- Violation of the unit transportation regulations by the user.
- Violation of the unit storage regulations by the user.
- Wrongful actions against the unit committed by third parties.
- Unit breakdown due to circumstances of insuperable force (fire, flood, earthquake, war, hostilities of any kind, blockades).
- Missing seals if provided by the user's manual.
- Failure to submit the user's manual with the unit purchase date stamp.
- Missing payment paperwork certifying the unit purchase.

The manufacturer shall not accept any claims with regards to the condition of the paint-and-lacquer coating (hereinafter PLC) in the following cases:

- Dents, cracks, scratches and abrasions of the PLC sustained during handling, mounting and assembly operations.
- Progress of corrosion on areas damaged with stones, sand, and roof coat tar during the performance of roofing work.
- Signs of direct exposure of the PLC to excessive temperatures, which occurred during the performance of roofing work.
- Violation of regulations on transportation, storage, installation, and operation of the unit.
- Presence of damage caused by exposure to industrial and chemical emissions, acidic or alkaline pollution, sap or other factors not related to normal operating conditions.

FOLLOWING THE REGULATIONS STIPULATED HEREIN WILL ENSURE A LONG AND TROUBLE-FREE OPERATION OF THE UNIT

USER'S WARRANTY CLAIMS SHALL BE SUBJECT TO REVIEW ONLY UPON PRESENTATION OF THE UNIT, THE PAYMENT DOCUMENT AND THE USER'S MANUAL WITH THE PURCHASE DATE STAMP

CERTIFICATE OF ACCEPTANCE

Unit Type	Roof axial smoke exhaust fan
Model	
Serial Number	
Manufacture Date	
Quality Inspector's Stamp	

SELLER INFORMATION

Seller	
Address	
Phone Number	
E-mail	
Purchase Date	
This is to certify acceptance of the complete unit delivery with the user's manual. The warranty terms are acknowledged and accepted.	
Customer's Signature	

Seller's Stamp

INSTALLATION CERTIFICATE

The _____ unit is installed pursuant to the requirements stated in the present user's manual.		
Company name		
Address		
Phone Number		
Installation Technician's Full Name		
Installation Date:	**Signature:**	
The unit has been installed in accordance with the provisions of all the applicable local and national construction, electrical and technical codes and standards. The unit operates normally as intended by the manufacturer.		
Signature:		

Installation Stamp

WARRANTY CARD

Unit Type	Roof axial smoke exhaust fan
Model	
Serial Number	
Manufacture Date	
Purchase Date	
Warranty Period	
Seller	

Seller's Stamp



Manufacturer: Ventilation Systems LLC,
Ukraine, Kyiv, 1 M. Kotsyubynskoho Street
Address of production facilities:
Ukraine, Kyiv Region, Fastiv District, Boyarka, 36 Sobornosti Street

V322EN-01