

Alta 100

EN **AXIAL FAN**
User's manual

VENTS

www.ventilation-system.com

CONTENTS

Delivery set 6
Brief description 6
Operation guidelines 7
Designation key 8
Installation and set-up 9
Fan options 14
Fan setup 15
Maintenance 16
Storage and transportation regulations 17
Manufacturer's warranty 18

This user's manual is a main operating document intended for technical, maintenance, and operating staff.
The manual contains information about purpose, technical details, operating principle, design, and installation of the Alta 100 unit and all its modifications.
Technical and maintenance staff must have theoretical and practical training in the field of ventilation systems and should be able to work in accordance with workplace safety rules as well as construction norms and standards applicable in the territory of the country.

This unit is not intended for use by persons (including children) with reduced physical, sensory or mental capabilities, or lack of experience and knowledge, unless they have been given supervision or instruction concerning use of the unit by a person responsible for their safety.
Children should be supervised to ensure that they do not play with the unit.
This appliance can be used by children aged from 8 years and above and persons with reduced physical, sensory or mental capabilities or lack of experience and knowledge if they have been given supervision or instruction concerning use of the appliance in a safe way and understand the hazards involved.
Cleaning and user maintenance shall not be done by children without supervision.
Children shall not play with the appliance.

Connection to the mains must be made through a disconnecting device, which is integrated into the fixed wiring system in accordance with the wiring rules for design of electrical units, and has a contact separation in all poles that allows for full disconnection under overvoltage category III conditions.

Ensure that the unit is switched off from the supply mains before removing the guard.

Do not attach the product to the support using glue or adhesives. Use only the fastening method specified in the "User's manual".

Precautions must be taken to avoid the back-flow of gases into the room from the open flue of gas or other fuel-burning appliances.

The appliance may adversely affect the safe operation of appliances burning gas or other fuels (including those in other rooms) due to back flow of combustion gases. These gases can potentially result in carbon monoxide poisoning. After installation of the unit the operation of flued gas appliances should be tested by a competent person to ensure that back flow of combustion gases does not occur.

All operations described in this manual must be performed by qualified personnel only, properly trained and qualified to install, make electrical connections and maintain ventilation units.
Do not attempt to install the product, connect it to the mains, or perform maintenance yourself.
This is unsafe and impossible without special knowledge.

Disconnect the power supply prior to any operations with the unit.
All user's manual requirements as well as the provisions of all the applicable local and national construction, electrical, and technical norms and standards must be observed when installing and operating the unit.
Disconnect the unit from the power supply prior to any connection, servicing, maintenance, and repair operations.
Connection of the unit to power mains is allowed by a qualified electrician with a work permit for the electric units up to 1000 V after careful reading of the present user's manual.
Check the unit for any visible damage of the impeller, the casing, and the grille before starting installation. The casing internals must be free of any foreign objects that can damage the impeller blades.
While mounting the unit, avoid compression of the casing! Deformation of the casing may result in motor jam and excessive noise.
Misuse of the unit and any unauthorised modifications are not allowed.
Transported air must not contain any dust or other solid impurities, sticky substances, or fibrous materials.
Do not use the unit in a hazardous or explosive environment containing spirits, gasoline, insecticides, etc.
Do not close or block the intake or extract vents in order to ensure the efficient air flow.
Do not sit on the unit and do not put objects on it.
The information in this user's manual was correct at the time of the document's preparation.
The Company reserves the right to modify the technical characteristics, design, or configuration of its products at any time in order to incorporate the latest technological developments.
Never touch the unit with wet or damp hands.
Never touch the unit when barefoot.
Do not install or use the product until all construction and finishing work has been completed in the room where it is to be installed.
BEFORE INSTALLING ADDITIONAL EXTERNAL DEVICES, READ THE RELEVANT USER MANUALS.



THE PRODUCT MUST BE DISPOSED SEPARATELY AT THE END OF ITS SERVICE LIFE.
DO NOT DISPOSE THE UNIT AS UNSORTED DOMESTIC WASTE.

DELIVERY SET

Fan	– 1	item
Screws with dowels	– 4	pcs.
Plastic screwdriver (for models with a timer)	– 1	item
Operation manual	– 1	item
Packing box	– 1	item
Insulating gasket (for models with a timer)	– 1	pc.

BRIEF DESCRIPTION

The product is a two-speed axial fan for exhaust ventilation of small and medium sized domestic premises.
The fan is designed for connection to ø 100 mm air ducts.
The fan is equipped with automatic louvres that open when the fan is turned on and close when the fan is turned off.

OPERATION GUIDELINES

The fan is rated for connection to single-phase ac 220-240 V/50 Hz or 12 V/50 Hz power supply and is designed for continuous operation always connected to power mains. The air flow direction is indicated by the arrow on the fan casing. Ingress protection rating against access to hazardous parts and water ingress is IP44.
The fan is rated for operation at the ambient temperature ranging from +1 °C up to +40 °C.
The unit is rated as a Class II electrical appliance (220-240 V/50 Hz) or Class III (12 V/50 Hz).

The overall and connection dimensions of the products are shown in the figure below.

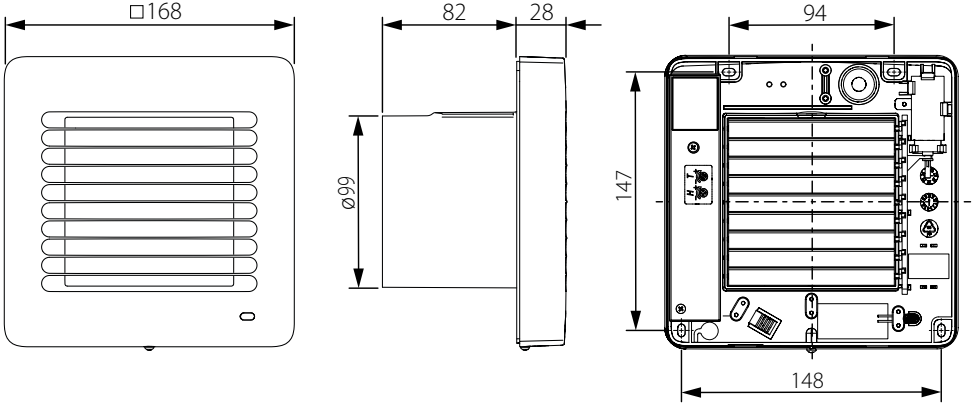

DESIGNATION KEY

Alta 100 - 12 T L

Options

_ – by default
L – motor on ball bearings

Basic options:

S – pull cord switch
T – turn-off delay timer
TH – humidity sensor and turn-off delay timer
VT – pull cord switch and turn-off delay timer
VTH – pull cord switch, turn-off delay timer and humidity sensor
T1 – turn-on and turn-off delay timer

Motor modifications

_ – basic motor
12 – low voltage motor 12V/50 Hz

Outlet duct diameter [mm]

Fan series

INSTALLATION AND SET-UP

The fan is designed for wall (with the motors on ball and slide bearings) or ceiling (with the motors on ball bearings only, L option) mounting and can be used for direct outdoor air exhaust through a round duct or a duct system. In case of installation through a duct system, select the duct cross section in accordance with the fan size.

When installing the fan with direct air discharge outside through the wall, be sure to install a ventilation grille with louvre shutters or a ventilation hood on the outside to prevent rainfall, snow, leaves, branches, etc. from entering the duct. To reduce the risk of condensate forming in the duct, the space between the hole in the wall and the duct must be insulated. Install the air duct with the minimum slope of 1...2° downwards to the outer wall side for condensate removal.

The duct system should not exceed 5 meters and have more than two bends.

During ceiling installation, vertical air discharge upwards is not allowed even if there is a protective outer hood on the roof.

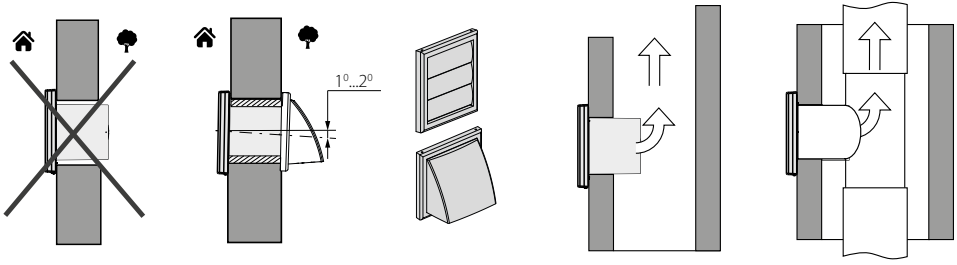

In case of ceiling mounting and roof air discharge, the air ducts system must include a condensate drain (not included in the delivery set, must be ordered separately).
Check the fan for any visible damages of the impeller, the casing and the grille before starting installation. The casing internals must be free of any foreign objects which can damage the impeller blades.
While mounting the unit, avoid compression of the casing! Deformation of the casing may result in motor jam and excessive noise.

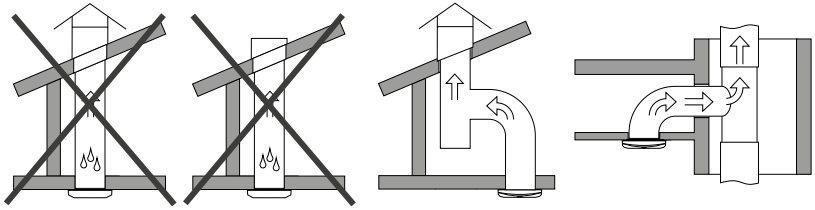

WARNING! Fans rated for 12 V (as specified on the fan packing and casing) must be connected to ~12 V electric mains only!

WARNING! The power cable may only be laid through the hole in the casing provided by the manufacturer. Laying the power cable through a manually drilled hole will not be the liability of the manufacturer and will void the warranty. The wire must be stripped of insulation by a maximum of 8 mm.

After installation, pass this user's manual to the end user for reading.

Units mounting is possible in zones 2 and 3, provided that the installation and connection are performed in accordance with the requirements of IEC 60364-7-701 (current edition), as well as in accordance with the requirements of the national standards of the country of installation.

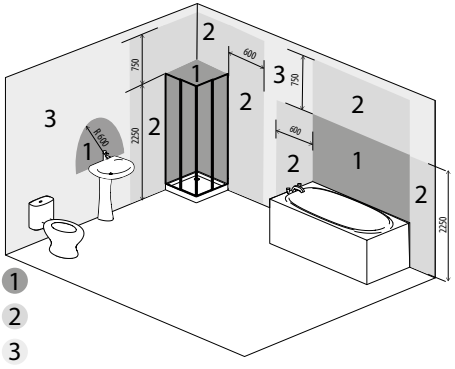

The fan mounting sequence:

1. Cut off power supply and make sure electricity has been turned off.

2. Remove the front panel of the fan.

3. Insert the fan into the ventilation opening and mark the location of the power cable and the casing mounting points on the wall;

4. Route the power cable to the point of entry into the fan casing and drill holes for mounting the fan, secure the insulating gasket (for T, TH, VT, VTH and T1 models);

5. Route the power cable into the fan casing through the cable gland and secure the fan.
Dowels and screws are designed for concrete and brick walls. If the walls are made of the other material (drywall, wood,etc.), use the fasteners appropriate for these materials to fasten the fan (not supplied with the fan and must be purchased separately).

6. For V model, connect the power cable to the terminal block, for T, TH, VT, VTH and T1 models, remove the cover from the control board and connect the power cable to the terminal block on the board according to the wiring diagram for your fan model;

7. Reinstall the control board cover, configure the fan operating modes by turning the potentiometers on the control board using a special plastic screwdriver;

8. Reinstall the front panel of the fan;

9. Supply power voltage to the fan.

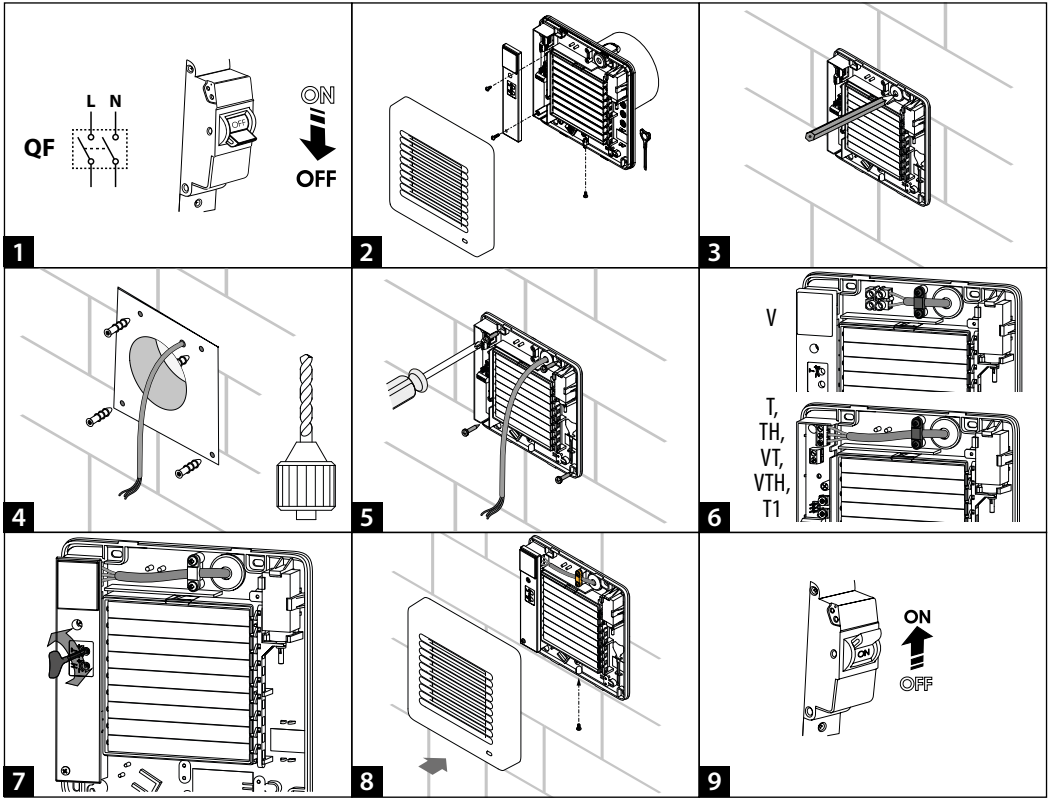
L N
QF
ON
OFF
1
2
3
4
5
V
T,
TH,
VT,
VTH,
T1
6
7
8
ON
OFF
9

Wiring diagrams

Alta 100/Alta 100-12

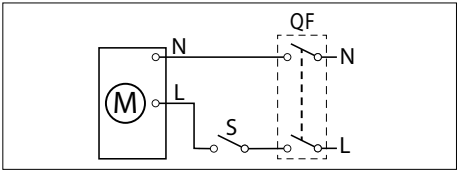

Alta 100/Alta 100-12 V

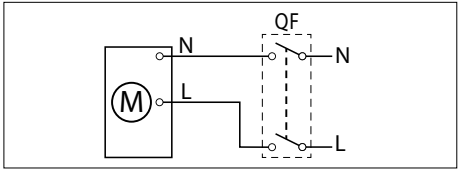

Alta 100 ... VT (VTH)

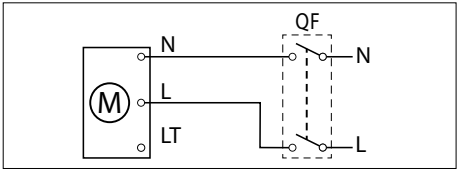

Alta 100 ... T (TH, T1)

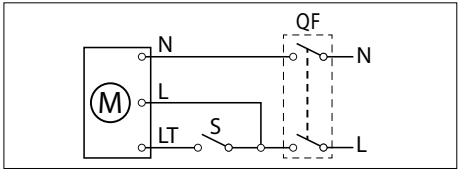

Terminal designations on wiring diagrams:

L — phase
N — 0
LT — timer control line
S — external switch
QF — automatic circuit breaker

FAN OPTIONS

V — the fan is turned on and off with a pull cord switch.

VT — the fan is equipped with a turn-off delay timer. Starts running when turned on using the pull cord switch. Upon turning off using the pull cord switch, the fan continues to run for the time set on the turn-off delay timer.

VTH — the fan is equipped with a humidity sensor and a turn-off delay timer. Starts running when turned on using the pull cord switch. Upon turning off using the pull cord switch, the fan continues to run for the time set on the turn-off delay timer. If the ambient humidity exceeds the threshold set by the control potentiometer, the fan starts to run. After the humidity drops below the set threshold, the fan will continue to run for the time set by the turn-off delay time.

T — the fan is equipped with a turn-off delay timer. The fan starts to run when the input terminal LT is energised by an external switch (e.g. when the room lights are switched on). Upon control voltage removal the fan continues to run for the period set by the timer.

T1 — the fan is equipped with a turn-on and turn-off delay timer. When the input terminal LT is energised by an external switch (e.g. switching on the room lights), the turn-on delay timer (0 to 2 minutes) is activated. After the turn-on delay time has elapsed, the fan starts to run. Upon control voltage removal the fan continues to operate for the period of time set by the turn-off delay timer.
If the control voltage is removed (e.g. by switching off the room lights) while the turn-on delay timer is active, the fan will remain turned off.

TH — the fan is equipped with a humidity sensor and a turn-off delay timer. The fan starts to run when the input terminal LT is energised by an external switch (e.g. when the room lights are switched on). Upon control voltage removal the fan continues to run for the period set by the timer. If the ambient humidity exceeds the threshold set by the control potentiometer, the fan starts to run automatically. After the humidity drops below the set threshold, the fan will continue to run for the time set by the turn-off delay time.

FAN SETUP

THE TIMER BOARD IS UNDER MAINS VOLTAGE.
MAKE SURE THE FAN IS COMPLETELY DISCONNECTED FROM THE POWER MAINS BEFORE ADJUSTING



To adjust the fan turn-on delay time, turn the control knob **Ton** clockwise to increase and counter-clockwise to decrease the turn-on delay time respectively, adjustable from 0 up to 2 minutes.



To adjust the fan turn-off delay time, turn the control knob **Toff** clockwise to increase and counter-clockwise to decrease the turn-off delay time respectively, adjustable from 2 up to 30 minutes.



To adjust the humidity sensor activation threshold, turn the potentiometer knob **H** clockwise to increase the threshold and counterclockwise to decrease the threshold value (from 60 % to 90 %).

The fan delivery set includes a specially designed plastic screwdriver for fan settings adjustments. Use it to change the turnon and turn-off delay time and the humidity set point.



DO NOT USE A METAL SCREWDRIVER, KNIFE, ETC. FOR ADJUSTMENT OPERATIONS NOT TO DAMAGE THE CIRCUIT BOARD

MAINTENANCE

The fan maintenance periodicity is at least once per 6 months.

Maintenance steps:

- Disconnect the fan from power supply and make sure electricity has been turned off.
- Remove the front plate/grille and clean the fan with a soft, dry cloth or brush;
- Wash the front panel / grille under running water.
- Wipe the fan surfaces dry.
- Cover the fan with the front panel / grille.
- Connect the power supply.

ATTENTION! Do not allow water or liquid come into contact with electric components!

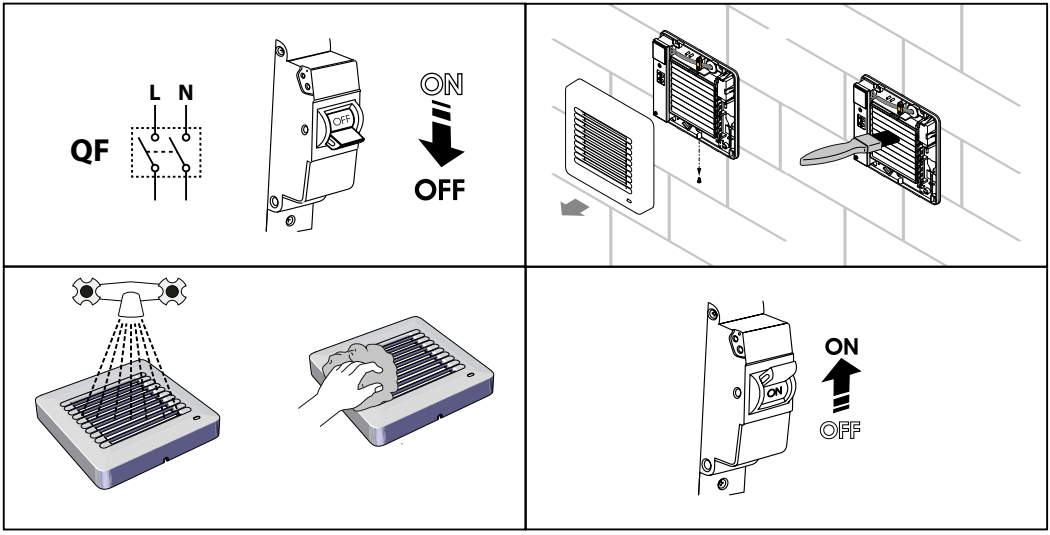

STORAGE AND TRANSPORTATION REGULATIONS

- Store the unit in the manufacturer's original packaging box in a dry closed ventilated premise with temperature range from +5 °C to + 40 °C and relative humidity up to 70 %.
- Storage environment must not contain aggressive vapors and chemical mixtures provoking corrosion, insulation, and sealing deformation.
- Use suitable hoist machinery for handling and storage operations to prevent possible damage to the unit.
- Follow the handling requirements applicable for the particular type of cargo.
- The unit can be carried in the original packaging by any mode of transport provided proper protection against precipitation and mechanical damage. The unit must be transported only in the working position.
- Avoid sharp blows, scratches, or rough handling during loading and unloading.
- Prior to the initial power-up after transportation at low temperatures, allow the unit to warm up at operating temperature for at least 3-4 hours.

MANUFACTURER'S WARRANTY

The product is in compliance with EU norms and standards on low voltage guidelines and electromagnetic compatibility. We hereby declare that the product complies with the provisions of Electromagnetic Compatibility (EMC) Directive 2014/30/EU of the European Parliament and of the Council, Low Voltage Directive (LVD) 2014/35/EU of the European Parliament and of the Council and CE-marking Council Directive 93/68/EEC. This certificate is issued following test carried out on samples of the product referred to above.

The manufacturer hereby warrants normal operation of the unit for 24 months after the retail sale date provided the user's observance of the transportation, storage, installation, and operation regulations. Should any malfunctions occur in the course of the unit operation through the Manufacturer's fault during the guaranteed period of operation, the user is entitled to get all the faults eliminated by the manufacturer by means of warranty repair at the factory free of charge. The warranty repair includes work specific to elimination of faults in the unit operation to ensure its intended use by the user within the guaranteed period of operation. The faults are eliminated by means of replacement or repair of the unit components or a specific part of such unit component.

The warranty repair does not include:

- routine technical maintenance
- unit installation/dismantling
- unit setup

To benefit from warranty repair, the user must provide the unit, the user's manual with the purchase date stamp, and the payment paperwork certifying the purchase. The unit model must comply with the one stated in the user's manual. Contact the Seller for warranty service.

The manufacturer's warranty does not apply to the following cases:

- User's failure to submit the unit with the entire delivery package as stated in the user's manual including submission with missing component parts previously dismounted by the user.
- Mismatch of the unit model and the brand name with the information stated on the unit packaging and in the user's manual.
- User's failure to ensure timely technical maintenance of the unit.
- Damage to the unit casing and internal components caused by the user.
- Redesign or engineering changes to the unit.
- Replacement and use of any assemblies, parts and components not approved by the manufacturer.

- Unit misuse.
- Violation of the unit installation regulations by the user.
- Violation of the unit control regulations by the user.
- Unit connection to power mains with a voltage different from the one stated in the user's manual.
- Unit breakdown due to voltage surges in power mains.
- Discretionary repair of the unit by the user.
- Unit repair by any persons without the manufacturer's authorization.
- Expiration of the unit warranty period.
- Violation of the unit transportation regulations by the user.
- Violation of the unit storage regulations by the user.
- Wrongful actions against the unit committed by third parties.
- Unit breakdown due to circumstances of insuperable force (fire, flood, earthquake, war, hostilities of any kind, blockades).
- Missing seals if provided by the user's manual.
- Failure to submit the user's manual with the unit purchase date stamp.
- Missing payment paperwork certifying the unit purchase.



FOLLOWING THE REGULATIONS STIPULATED HEREIN WILL ENSURE A LONG AND TROUBLE-FREE OPERATION OF THE UNIT



USER'S WARRANTY CLAIMS SHALL BE SUBJECT TO REVIEW ONLY UPON PRESENTATION OF THE UNIT, THE PAYMENT DOCUMENT AND THE USER'S MANUAL WITH THE PURCHASE DATE STAMP

Certificate of acceptance

Alta 100 _____

Quality Inspector's Stamp _____

Seller _____
(name and stamp of the seller)

_____

Purchase Date _____

The fan is recognized as serviceable

Manufacturer: Ventilation Systems LLC,
Ukraine, Kyiv, 1 M. Kotsyubynskoho Street
Address of production facilities:
Ukraine, Kyiv Region, Fastiv District, Boyarka, 36 Sobornosti Street